TWELVE MILE LAKE ENHANCEMENTS

TWELVE MILE LAKE
SECTION 20, TWELVE MILE LAKE TOWNSHIP
EMMET COUNTY, IOWA

IN COOPERATION WITH

IOWA DEPARTMENT OF NATURAL RESOURCES
DNR PROJECT # 26-01-32-02

LINK TO JOBSITE

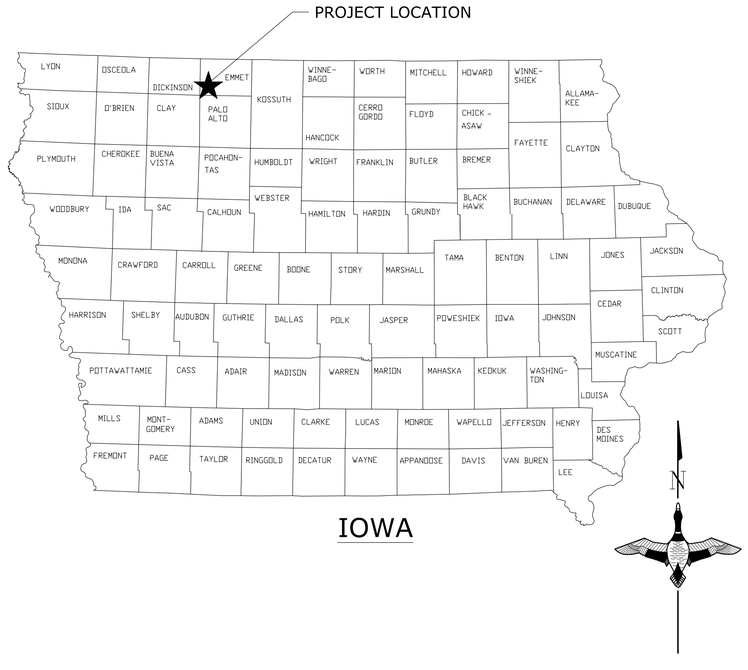

IOWA

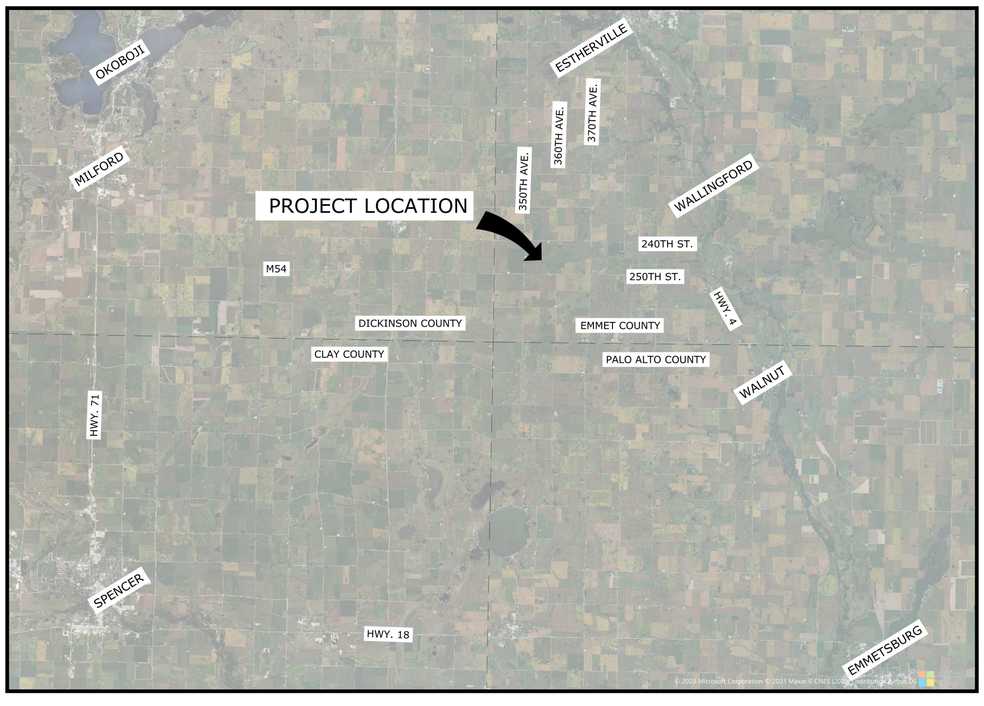

PROJECT LOCATION MAP

SCALE: NOT TO SCALE

SHEET INDEX	
SHEET	TITLE
C001	COVER SHEET
C002	SPECIFICATIONS AND NOTES
C050	EXISTING CONDITIONS OVERVIEW
C051	EXISTING CONDITIONS AND REMOVALS
C100	SITE PLAN OVERVIEW
C101	SITE PLAN AND PROFILE
C301	DETAILS
C302	DETAILS
C303	DETAILS
C304	DETAILS

Know what's **below.** **Call** before you dig.

AUTHORIZATION TO BID

Kelsey Fleming — Digitally signed by Kelsey Fleming Date: 2026.08.13 15:09:20 -05'00'

AUTHORIZED - PARKS I WILDLIFE I FISHERIES | LAW ENFORCEMENT — DATE

Travis Baker — Digitally signed by Travis Baker Date: 2026.08.13 15:59:27 -05'00'

ENGINEERING BUREAU CHIEF — DATE

JOHN G. WASHINGTON P18872 LICENSED PROFESSIONAL ENGINEER IOWA

I hereby certify that this engineering document was prepared by me or under my direct personal supervision and that I am a duly licensed Professional Engineer under the laws of the State of Iowa.

John G. Washington, P.E. — 7/10/2026 Date

My license number is P18872
My license renewal date is December 31, 2027
Pages or sheets covered by this seal:

ALL UNDER THIS COVER

GREAT LAKES/ATLANTIC REGIONAL OFFICE
7322 NEWMAN BOULEVARD, BUILDING 1
DEXTER, MICHIGAN 48130
(734) 623-2000
www.ducks.org
DUCKS UNLIMITED

AFFIX SEAL: DUCKS UNLIMITED, INC.

ON:

COVER SHEET
TWELVE MILE LAKE ENHANCEMENTS
TWELVE MILE LAKE
EMMET COUNTY, IOWA

By	Date	Revisions	Sheet	Revision

CAD FILE: IA-355-1 COVER & NOTES
DESIGNED BY: JGW
DRAWN BY: JGW
SURVEYED BY: AB JGW
BIOLOGIST: DB
DATE: 07/08/2026
PROJECT NUMBER: US-IA-355-1

C001

NOTICE: CONSTRUCTION SITE SAFETY IS THE SOLE RESPONSIBILITY OF THE CONTRACTOR; DUCKS UNLIMITED, INC. SHALL NOT ASSUME ANY RESPONSIBILITY FOR THE SAFETY OF THE WORK PERFORMED, PERSONS ENGAGED IN THE WORK, NEARBY STRUCTURES, OR OF OTHER PERSONS ON-SITE. THIS PLAN, AS AN INSTRUMENT OF SERVICE, IS THE PROPERTY OF DUCKS UNLIMITED, INC. AND MAY NOT BE USED OR REPRODUCED FOR ANY PURPOSE WITHOUT THE PRIOR, WRITTEN CONSENT OF AN AUTHORIZED AGENT OF DUCKS UNLIMITED, INC. ANY USE OF THIS MATERIAL, DATA AND INFORMATION, OR ANY PORTION THEREOF, WITHOUT THE PRIOR, WRITTEN CONSENT OF DUCKS UNLIMITED, INC. IS AT THE USER'S SOLE RISK. BY USING ANY OF THIS MATERIAL, DATA AND INFORMATION, USER AGREES THAT DUCKS UNLIMITED, INC. IS NOT RESPONSIBLE FOR THEIR USE OF THE MATERIAL, DATA AND INFORMATION OR THE RESULTS THEREOF. THIS MATERIAL, DATA AND INFORMATION IS NOT INTENDED TO BE USED AS A CONSTRUCTION DOCUMENT UNLESS IT BEARS THE STAMP OF A LICENSED PROFESSIONAL IS ALTERED, THE ALTERING ENGINEER, ARCHITECT, LANDSCAPE ARCHITECT OR LAND SURVEYOR SHALL STAMP THE DOCUMENT AND INCLUDE THE NOTATION 'ALTERED BY' FOLLOWED BY THEIR SIGNATURE, THE DATE OF SUCH ALTERATION, AND A SPECIFIC DESCRIPTION OF THE ALTERATION.

C:\Users\gsmith\OneDrive - Ducks Unlimited Incorporated\Iowa\02_C3D Projects\IA-355-1 Twelve Mile Lake\C3D_DRAWING\IA-355-1 COVER & NOTES.dwg, 7/9/2026 10:36 AM, Gareth Smith, C001, None

ESTIMATED BID QUANTITIES

BID ITEM	BID ITEM NOTE	SPEC #	DESCRIPTION	UNIT	QUANTITY
1	1	201, 404	MOBILIZATION	LS	1
2	2	202	SITE PREPARATION / MISC. REMOVALS	LS	1
3	3	203	EXCAVATION	CY-P	725
4	4	203	LAKE EXCAVATION	LS	1
5	5	204	EMBANKMENT CONSTRUCTION	CY-P	900
6	6	301, 302, 309	STORM SEWER MANHOLE	LS	1
7	7	302, 303	STORM SEWER - 24"	LF	579
8	8	302, 303	STORM SEWER - 24" RCP	LF	132
9	9	305	RIPRAP - EXISTING FIELD STONE STOCKPILE	LS	1
10	10	305	CLASS I FIELD STONE	TN	150
11	11	309	FABRICATED INTAKE BAR GUARD	EA	1
12	12	401	SOIL EROSION AND POLLUTION CONTROL - SILT FENCE	LF	300
13	13	401	SOIL EROSION AND POLLUTION CONTROL - WATTLE	LF	300
14	14	401	SOIL EROSION AND POLLUTION CONTROL - IOWA DNR NPDES GENERAL PERMIT NO.2	LS	1
15	15	402	TEMPORARY ROLLED EROSION CONTROL PRODUCT (RECP)	SY	1100
16	16	402	SEEDING AND MULCHING	AC	2
17	17	202	CONSTRUCTION STAKING & LAYOUT	LS	1

GENERAL NOTES:

1. ALL WORK SHALL BE COMPLETED PER DUCKS UNLIMITED SPECIFICATIONS. IF REQUIRED WORK IS NOT INCLUDED IN DUCKS UNLIMITED SPECIFICATIONS, WORK SHALL CONFORM TO THE CURRENT EDITION OF THE IOWA STATEWIDE URBAN DESIGN AND SPECIFICATIONS (SUDAS).
2. CONTRACTOR SHALL CONFIRM LOCATION AND DEPTH OF ALL EXISTING UTILITIES PRIOR TO CONSTRUCTION. ENGINEER AND OWNER DO NOT GUARANTEE THE LOCATION, ACCURACY, OR COMPLETENESS OF EXISTING UTILITIES SHOWN ON THIS PLAN. THE CONTRACTOR SHALL CONTACT IOWA ONE-CALL FOR UTILITY LOCATIONS 48 HOURS PRIOR TO BEGINNING EXCAVATION.
3. SAFETY IS THE SOLE RESPONSIBILITY OF THE CONTRACTOR.
4. ANY NECESSARY COFFER DAMS, DEWATERING SYSTEMS, EXCAVATION SHORING, OR RELATED ITEMS SHALL BE DESIGNED AND INSTALLED BY THE CONTRACTOR. THESE ITEMS SHALL BE CONSIDERED INCIDENTAL TO OTHER ITEMS OF WORK. THERE WILL BE NO ADDITIONAL COMPENSATION FOR THESE ITEMS. THE CONTRACTOR SHALL SUBMIT A WRITTEN INCREMENTAL DEWATERING PLAN TO DNR STAFF FOR REVIEW AND APPROVAL PRIOR TO STARTING ANY DEWATERING OPERATIONS. ANY LAKE DEWATERING SHALL NOT OCCUR PRIOR TO NOVEMBER 1.
5. ANY AND ALL DISCREPANCIES SHALL BE REPORTED TO THE ENGINEER IMMEDIATELY. ALL QUANTITIES ARE FOR CONTRACTOR CONVENIENCE ONLY.
6. WORK THAT IS INDICATED ON THESE PLANS OR IS REQUIRED IN ORDER TO COMPLETE THE WORK SHOWN ON THESE PLANS BUT DOES NOT HAVE A SPECIFIC BID ITEM SHALL BE CONSIDERED INCIDENTAL WORK TO OTHER ITEMS ON THE PLAN. NO ADDITIONAL COMPENSATION WILL BE PROVIDED FOR INCIDENTAL WORK.
7. SHOP DRAWINGS/SUBMITTALS ARE REQUIRED FOR ALL MATERIALS TO BE INCORPORATED IN THIS PROJECT. ENGINEER AND OWNER REVIEW OF SHOP DRAWINGS/SUBMITTALS SHALL NOT RELIEVE THE CONTRACTOR OF THEIR RESPONSIBILITY TO MEET THE REQUIREMENTS OF THE CONTRACT. THE CONTRACTOR IS ULTIMATELY RESPONSIBLE TO ENSURE THAT MATERIALS, DIMENSIONS, AND FABRICATIONS ARE IN CONFORMANCE WITH THE CONTRACT DOCUMENTS. ANY COST ASSOCIATED WITH REWORK, MODIFICATIONS, OR OBTAINING REPLACEMENT MATERIALS IN ORDER TO MEET THE CONTRACT DOCUMENTS SHALL BE BORNE BY THE CONTRACTOR.
8. ALL ELEVATIONS ARE NORTH AMERICAN VERTICAL DATUM 1988 (NAVD88). DESIGN CONTOURS SHOWN ARE TO FINISHED GRADE ELEVATIONS UNLESS OTHERWISE NOTED.
9. SITE ACCESS IS SHOWN ON THE PLAN. THE CONTRACTOR SHALL NOT UTILIZE ALTERNATE ACCESS TO THE SITE UNLESS PRIOR APPROVAL HAS BEEN OBTAINED FROM THE OWNER OR ENGINEER. ANY TRACKOUT FROM THE WORK SITE SHALL BE CLEANED UP BY THE CONTRACTOR IMMEDIATELY.
10. UNLESS OTHERWISE INDICATED, CONTRACTOR SHALL MAKE ALL NECESSARY CONNECTIONS TO EXISTING FACILITIES, PIPELINES, OR STRUCTURES. PRIOR TO MAKING SUCH CONNECTIONS, THE CONTRACTOR SHALL OBTAIN PERMISSION FROM THE OWNING UTILITY AND SHALL NOTIFY OWNERS OF ADJACENT PROPERTIES AND UTILITIES WHEN WORK MAY EFFECT THEM OR THEIR UTILITY SERVICE. NOTIFICATIONS SHALL BE DONE SUFFICIENTLY IN ADVANCE TO ALLOW FOR THE OWNING UTILITY OR OWNERS OF ADJACENT PROPERTIES TO MAKE SUFFICIENT ARRANGEMENTS TO ACCOMMODATE THE PLANNED WORK. CONTRACTOR SHALL THOROUGHLY PLAN THE WORK IN ADVANCE AND HAVE ALL NECESSARY LABOR, EQUIPMENT, SUPERVISION, AND MATERIALS ONSITE TO COMPLETE THE WORK IN A TIMELY MANOR.
11. ALL WORK SHALL BE COMPLETED TO THE LINES, GRADES, AND ELEVATIONS INDICATED ON THE PLANS. THE CONTRACTOR SHALL MAINTAIN DRAINAGE PATHS TO PREVENT PONDING OF WATER DURING CONSTRUCTION.
12. DURING TIMES OF UNFAVORABLE WEATHER CONDITIONS, THE CONTRACTOR SHALL CONFINE THEIR WORK TO AREAS THAT WILL NOT BE ADVERSELY EFFECTED BY SUCH CONDITIONS. NO WORK SHALL BE COMPLETED UNDER CONDITIONS WHICH WILL CAUSE THE QUALITY OR EFFICIENCY OF THE WORK TO BE ADVERSELY EFFECTED UNLESS SPECIAL MEANS ARE UNDERTAKEN BY THE CONTRACTOR TO ADDRESS THE ADVERSE CONDITIONS.
13. DUCKS UNLIMITED WILL PROVIDE THE CONTRACTOR WITH DIGITAL FINISH GRADE SURFACES FOR GRADING AREAS ALONG WITH CONTROL POINTS FOR THE PROJECT WHEN REQUESTED. THERE WILL BE NO CONSTRUCTION STAKES SET IN THE FIELD BY DUCKS UNLIMTED OR DNR STAFF. IT WILL BE THE RESPONSIBILITY OF THE CONTRACTOR TO PROVIDE THEIR OWN STAKING FOR THE PROJECT UTILIZING THE SURVEY CONTROL PROVIDED IN THE PLANS.
14. THE CONTRACTOR SHALL PROTECT ALL SURVEY CONTROL AND PROPERTY PINS ENCOUNTERED. ANY DESTROYED SURVEY CONTROL OR PROPERTY PINS SHALL BE RESET BY LICENSED SURVEYOR AT THE COST OF THE CONTRACTOR.
15. TO PROTECT THREATENED AND ENDANGERED BATS, TREES 3" IN DIAMETER OR LARGER SHALL BE FELLED/REMOVED BETWEEN OCTOBER 1ST AND MARCH 31ST ONLY.

BID ITEM NOTES:

1. BID ITEM FOR MOBILIZATION SHALL INCLUDE THE SUPPLY OF ALL LABOR, MATERIAL, AND EQUIPMENT TO TRANSPORT ALL NEEDED LABOR, MATERIAL, AND EQUIPMENT, TO AND FROM THE PROJECT SITE, TO SUCCESSFULLY COMPLETE THE PROJECT AS SHOWN ON THE PLANS. PAYMENT SHALL BE LUMP SUM.
2. BID ITEM FOR SITE PREPARATION / MISC. REMOVALS SHALL INCLUDE TOPSOIL STRIPPING AT EXCAVATION AND EMBANKMENT AREAS, STOCKPILING TOPSOIL FOR REPLACEMENT, PLACING TOPSOIL OVER ALL DISTURBED AREAS, AND PREPARING RESPREAD TOPSOIL FOR SEEDING. SITE PREPARATION SHALL ALSO INCLUDE REMOVAL OF TREES, STUMPS, ROOTS, BRUSH, ROCK, GRASS, FENCING, FENCE POSTS AND ALL OTHER RUBBISH WHERE INDICATED OR AS NECESSARY TO COMPLETE THE PROJECT AS SHOWN ON THE PLANS. RESTORATION AND MAINTENANCE OF ACCESS ROUTES AS REQUIRED TO RETURN THEM TO ORIGINAL CONDITION IS ALSO INCIDENTAL TO THIS ITEM. TREES AND BRUSH SHALL BE STOCKPILED ONSITE AT THE LOCATION INDICATED ON THE PLANS. FENCING, FENCE POSTS, AND OTHER RUBBISH SHALL BECOME THE CONTRACTOR'S PROPERTY AND SHALL BE DISPOSED OF PROPERLY AT AN OFFSITE LOCATION. TREES AND BRUSH SHALL BE STOCKPILED ONSITE AT THE LOCATION INDICATED ON THE PLANS. PAYMENT SHALL BE LUMP SUM.
3. BID ITEM FOR EXCAVATION SHALL INCLUDE THE SUPPLY OF ALL LABOR, MATERIAL, AND EQUIPMENT NECESSARY TO EXCAVATE MATERIALS AS SHOWN ON THE PLANS WITH THE EXCEPTION OF EXCAVATION WITHIN THE LAKE WHICH IS A SEPARATE BID ITEM. MATERIAL EXCAVATED FOR EMBANKMENT CONSTRUCTION SHALL BE APPROVED BY THE ENGINEER AND STOCKPILED ON SITE FOR THE EMBANKMENT CONSTRUCTION. ANY ROCKS OR BOULDERS ENCOUNTERED DURING EXCAVATION SHALL BE STOCKPILED ONSITE WHERE DIRECTED BY THE ENGINEER. THE ESTIMATED QUANTITY FOR EXCAVATION IS A RAW QUANTITY (UNADJUSTED FOR SHRINK/SWELL). PLANS SHOW SPOILS/BORROW AREAS FOR THE PROJECT. IF THE SPOILS/BORROW AREAS ARE UTILIZED BY THE CONTRACTOR, TOPSOIL SHALL BE STRIPPED AND STOCKPILED. SPOILS/BORROWS SHALL BE DONE IN A MANNER THAT DOES NOT ALTER EXISTING DRAINAGE PATTERNS OR CREATE PONDING. TOPSOIL SHALL BE RESPREAD AND THE AREA SHALL BE SEEDED AND MULCHED. PAYMENT SHALL BE CUBIC YARD - PLAN. THERE WILL BE NO ADJUSTMENT MADE FOR INCREASE OR DECREASE TO QUANTITY.
4. BID ITEM FOR LAKE EXCAVATION SHALL INCLUDE THE SUPPLY OF ALL LABOR, MATERIAL, AND EQUIPMENT NECESSARY TO EXCAVATE BEYOND THE PIPE INLET WITHIN THE LAKE AS SHOWN ON THE PLANS. ANY ROCKS OR BOULDERS ENCOUNTERED DURING EXCAVATION SHALL BE STOCKPILED ONSITE WHERE DIRECTED BY THE ENGINEER. EXCAVATED MATERIAL SHALL BE SPREAD OVER THE SPOILS AREA OR OTHER AREAS OF THE SITE AS DIRECTED BY DU OR DNR STAFF PRIOR TO SEEDING. PAYMENT SHALL BE LUMP SUM.
5. BID ITEM FOR EMBANKMENT CONSTRUCTION SHALL INCLUDE ALL WORK REQUIRED TO HAUL, PLACE, AND COMPACT FILL MATERIAL TO CONSTRUCT THE EARTHWORK AS SHOWN ON THE PLANS. SURFACE FILES WILL BE PROVIDED TO THE CONTRACTOR FOR EMBANKMENT CONSTRUCTION. NO STAKES WILL BE PROVIDED IN THE FIELD. SEE GPS MACHINE CONTROL NOTE. ANY MATERIAL EITHER NEEDED OR REMAINING FROM THIS OPERATION SHALL BE UTILIZED FROM THE SPOILS/BORROW AREAS SHOWN ON THE PLANS OR AS DIRECTED BY THE ENGINEER. THE ESTIMATED QUANTITY FOR EMBANKMENT CONSTRUCTION IS A RAW QUANTITY (UNADJUSTED FOR SHRINK/SWELL). PAYMENT SHALL BE PER CUBIC YARD - PLAN. THERE WILL BE NO ADJUSTMENT MADE FOR INCREASE OR DECREASE TO QUANTITY.
6. BID ITEM FOR STORM SEWER MANHOLE SHALL INCLUDE THE SUPPLY OF ALL LABOR, MATERIAL, AND EQUIPMENT TO INSTALL THE STORM SEWER MANHOLE AS SHOWN ON THE PLANS. THIS ITEM SHALL INCLUDE THE STORM SEWER MANHOLE PRECAST CONCRETE, GRATING, STEEL FRAMING, STOPLOGS, STOPLOG STORAGE BOX AND CONCRETE PAD, AND ALL OTHER ASSOCIATED APPURTENANCES NECESSARY TO INSTALL A COMPLETE SYSTEM AS DETAILED IN THE PLANS. PAYMENT SHALL BE LUMP SUM.
7. BID ITEM FOR STORM SEWER - 24" SHALL INCLUDE THE SUPPLY OF ALL LABOR, MATERIAL, AND EQUIPMENT TO INSTALL STORM SEWER AS SHOWN ON THE PLANS. PIPE MATERIAL SHALL BE CONTECH A2000 PVC. THE LAST 10-LF OF PIPE ADJACENT TO A PIPE OUTLET AND OTHER AREAS AS NOTED ON THE PLAN SHALL BE CMP. PROPER TRANSITION COUPLINGS BETWEEN DIFFERING PIPE MATERIALS IS INCIDENTAL TO THIS ITEM. CONNECTIONS TO STRUCTURES SHALL BE WATERTIGHT BY MEANS OF FLEXIBLE COUPLING, FLEXIBLE BOOT, MODULAR SEAL, OR CONCRETE COLLAR PER SUDAS SW-211. THIS ITEM INCLUDES CRITTER GUARDS, HEAVY DUTY BAR GUARDS, ANCHORS, PIPE END SUPPORT, TIES AND BENTONITE, CONCRETE, OR CMP SEEPAGE COLLARS WHERE INDICATED ON THE PLANS. ALL JOINTS SHALL BE GASKETED. PAYMENT SHALL BE PER LINEAR FOOT OF STORM SEWER INSTALLED.
8. BID ITEM FOR STORM SEWER - 24" RCP SHALL INCLUDE THE SUPPLY OF ALL LABOR, MATERIAL, AND EQUIPMENT TO INSTALL STORM SEWER AS SHOWN ON THE PLANS. PIPE MATERIAL SHALL BE RCP WITH GASKETS. ALL PIPE SECTIONS SHALL BE TIED WITH HEAVY DUTY TIE RODS. CONNECTIONS TO STRUCTURES SHALL BE WATERTIGHT BY MEANS OF FLEXIBLE COUPLING, FLEXIBLE BOOT, MODULAR SEAL, OR CONCRETE COLLAR PER SUDAS SW-211. THIS ITEM INCLUDES CRITTER GUARDS, HEAVY DUTY BAR GUARDS, FABRICATED INTAKE BAR GUARDS, ANCHORS, PIPE END SUPPORT, TIES AND BENTONITE, CONCRETE, OR CMP SEEPAGE COLLARS WHERE INDICATED ON THE PLANS. PAYMENT SHALL BE PER LINEAR FOOT OF STORM SEWER INSTALLED.
9. BID ITEM FOR RIPRAP - EXISTING FIELD STONE STOCKPILE SHALL INCLUDE THE SUPPLY OF ALL LABOR, MATERIAL, AND EQUIPMENT NECESSARY TO LOAD, HAUL, AND PLACE EXISTING FIELD STONE RIPRAP AS SHOWN ON THE PLANS. NON-WOVEN FILTER FABRIC IS REQUIRED BENEATH ALL ROCK/RIPRAP AND SHALL BE SECURED TO SLOPES AND BOTTOM USING PINS AS NOTED IN DU SPECIFICATION 305. FINAL PLACEMENT OF RIPRAP SHALL BE APPROVED BY THE ENGINEER. CONTRACTOR SHALL MAKE A SITE VISIT PRIOR TO THE BID TO REVIEW THE LOCATION, SIZE, AND ACCESSIBILITY TO THE EXISTING STOCKPILE SHOWN ON PLANS. THE CONTRACTOR SHALL USE ALL AVAILABLE FIELD STONE RIPRAP FROM THE STOCKPILE AREA BEFORE PLACING ADDITIONAL PURCHASED FIELD STONE RIPRAP. PAYMENT SHALL BE LUMP SUM.
10. BID ITEM FOR CLASS I FIELD STONE SHALL INCLUDE THE SUPPLY OF ALL LABOR, MATERIAL, AND EQUIPMENT NECESSARY TO PURCHASE, HAUL, AND PLACE RIPRAP AS SHOWN ON THE PLANS. NON-WOVEN FILTER FABRIC IS REQUIRED BENEATH ALL ROCK/RIPRAP WHEN PLACED OVER SOIL AND SHALL BE SECURED TO SLOPES AND BOTTOM USING PINS AS NOTED IN DU SPECIFICATION 305. FINAL PLACEMENT OF RIPRAP SHALL BE APPROVED BY THE ENGINEER THE CONTRACTOR SHALL PROVIDE SCALE TICKETS FOR MATERIAL DELIVERED. CONTRACTOR SHALL UTILIZE EXISTING ONSITE FIELD STONE PILE TO THE MAXIMUM EXTENT PRACTICAL PRIOR TO UTILIZING OFFSITE FIELD STONE. PAYMENT SHALL BE PER TON PLACED.
11. BID ITEM FOR FABRICATED INTAKE BAR GUARD SHALL INCLUDE THE SUPPLY OF ALL LABOR, MATERIAL, EQUIPMENT, AND METAL FABRICATIONS NECESSARY TO INSTALL THE FABRICATED INTAKE BAR GUARD. BRACKETS, PIPE BAND, BOLTS, NUTS, ATTACHMENTS AND ALL OTHER ASSOCIATED APPURTENANCES NECESSARY TO INSTALL A COMPLETE SYSTEM SHALL BE INCIDENTAL TO THIS ITEM. THE CONTRACTOR IS RESPONSIBLE FOR FIELD VERIFYING ALL DIMENSIONS AND QUANTITIES. PAYMENT SHALL BE LUMP SUM.
12. BID ITEM FOR SOIL EROSION AND POLLUTION CONTROL - SILT FENCE SHALL INCLUDE THE SUPPLY OF LABOR, MATERIAL, AND EQUIPMENT TO INSTALL SILT FENCE. EROSION CONTROL MEASURES ARE NOT SHOWN ON THE PLANS. THE ENGINEER HAS INCLUDED AN ESTIMATED QUANTITY IN ORDER TO ESTABLISH A UNIT PRICE. EROSION CONTROL MEASURES SHALL BE INSTALLED ON AN AS-NEEDED BASIS AS DIRECTED BY THE ENGINEER OR OWNER. MEASUREMENT AND PAYMENT SHALL BE PER LINEAR FOOT INSTALLED.
13. BID ITEM FOR SOIL EROSION AND POLLUTION CONTROL - WATTLE SHALL INCLUDE THE SUPPLY OF LABOR, MATERIAL, AND EQUIPMENT TO INSTALL WATTLES. EROSION CONTROL MEASURES ARE NOT SHOWN ON THE PLANS. THE ENGINEER HAS INCLUDED AN ESTIMATED QUANTITY IN ORDER TO ESTABLISH A UNIT PRICE. EROSION CONTROL MEASURES SHALL BE INSTALLED ON AN AS-NEEDED BASIS AS DIRECTED BY THE ENGINEER OR OWNER. MEASUREMENT AND PAYMENT SHALL BE PER LINEAR FOOT INSTALLED.
14. BID ITEM FOR SOIL EROSION AND POLLUTION CONTROL - IOWA DNR NPDES GENERAL PERMIT NO.2 SHALL INCLUDE THE SUPPLY OF ALL LABOR, MATERIALS, AND PERMIT FEES NECESSARY TO OBTAIN THE REQUIRED GENERAL PERMIT NO.2 FOR STORM WATER DISCHARGE ASSOCIATED WITH CONSTRUCTION ACTIVITIES. THE CONTRACTOR SHALL OBTAIN THE PERMIT AND COMPLY WITH ALL REQUIREMENTS OF THE PERMIT. INSTALLATION AND MAINTENANCE OF BEST MANAGEMENT PRACTICES SHALL BE INCIDENTAL TO THIS ITEM WITH THE EXCEPTION OF THE INSTALLATION OF WATTLES OR SILT FENCE WHICH ARE PAID AS SEPARATE ITEMS. PAYMENT FOR THIS ITEM SHALL BE LUMP SUM.
15. BID ITEM FOR TEMPORARY ROLLED EROSION CONTROL PRODUCT (RECP) SHALL INCLUDE THE SUPPLY OF LABOR, MATERIAL, AND EQUIPMENT REQUIRED TO INSTALL RECP WHERE INDICATED ON THE PLANS. RECP SHALL BE SUDAS TYPE 2C. THE CONTRACTOR IS REQUIRED TO COORDINATE RECP INSTALLATION TO OCCUR IMMEDIATELY AFTER SEEDING. PAYMENT SHALL PER SQUARE YARD OF INSTALLED RECP AS MEASURED IN THE FIELD AND VERIFIED BY THE ENGINEER.
16. BID ITEM FOR SEEDING AND MULCHING SHALL INCLUDE THE SUPPLY OF LABOR, MATERIAL, AND EQUIPMENT REQUIRED TO SPREAD SEED AND MULCH ON DISTURBED AREAS OF THE CONSTRUCTION SITE OR WHERE INDICATED BY DNR STAFF. SEED MIX SHALL BE 20 LB./AC BROME WITH 30 LB./AC OATS. SEEDING SHALL BE COMPLETED AS PER SUDAS GUIDELINES AND PLACED CONVENTIONALLY UPON PREPARED SEEDBED AND THEN HYDRO MULCHED USING A WOOD CELLULOSE MULCH. FERTILIZER SHALL BE OMITTED ON THIS PROJECT DUE TO ITS PROXIMITY TO SURFACE WATER. FULL COVERAGE OF THE SOIL SURFACE WITH MULCH IS REQUIRED. SEEDING DATES SHALL BE PER SUDAS. THE ENGINEER HAS INCLUDED AN ESTIMATED QUANTITY IN ORDER TO ESTABLISH A UNIT PRICE. ALL AREAS THAT ARE DISTURBED AND NOT SURFACED BY OTHER MEANS SHALL RECEIVE SEEDING/MULCHING PER THIS SPECIFICATION. MEASUREMENT AND PAYMENT SHALL BE PER ACRE OR PART THEREOF AS MEASURED IN THE FIELD AND VERIFIED BY THE ENGINEER.
17. BID ITEM FOR CONSTRUCTION STAKING AND LAYOUT SHALL INCLUDE THE SUPPLY OF ALL LABOR, MATERIALS, AND EQUIPMENT NECESSARY TO OBTAIN CONSTRUCTION STAKING AND LAYOUT FOR THE PROJECT. STAKING AND LAYOUT REQUIRED FOR THE PROJECT SHALL BE THAT WHICH PROVIDES ADEQUATE INFORMATION FOR THE SUCCESSFUL CONSTRUCTION OF THE PROJECT TO THE LINES, GRADES, AND ELEVATIONS SHOWN ON THE PLANS. PAYMENT FOR THIS ITEM SHALL BE LUMP SUM.

SPECIFICATIONS

101 GENERAL CONDITIONS
102 SUPPLEMENTAL CONDITIONS
201 MOBILIZATION
202 SITE PREPARATION
203 EXCAVATION
204 EMBANKMENT CONSTRUCTION
205 CONSTRUCTED TOPOGRAPHY
206 WATER
301 WATER CONTROL STRUCTURES
302 STRUCTURE AND CULVERT APPURTENANCES
303 CULVERT AND PIPE INSTALLATION
304 CAST-IN-PLACE REINFORCED CONCRETE
305 RIPRAP, REVETMENT AND AGGREGATE PLACEMENT
306 TOE DRAIN INSTALLATION
307 SHEET PILING
308 STEEL PILING
309 STRUCTURAL STEEL
311 REMOVAL OF EXISTING CULVERTS AND STRUCTURES
312 TILE DRAIN LOCATION AND REMOVAL
313 PUMP INSTALLATION
314 WATER WELL DRILLING
315 SUPPLY OF ELECTRICAL POWER
316 DIKE AND ROAD SURFACING
317 FENCING
318 BUILDINGS
319 DECKING AND RAILING
320 WATER PIPELINE INSTALLATION
401 SOIL EROSION AND POLLUTION CONTROL
402 SEEDING AND MULCHING
403 HERBICIDE APPLICATION
404 TRAFFIC MAINTENANCE AND CONTROL

LEGEND

EXISTING

- DIKE
- CHANNEL
- DITCH
- 1415 MAJOR CONTOUR
- 1413 MINOR CONTOUR
- TREE LINE
- EDGE OF VEGETATION
- EDGE OF CULTIVATION
- APPROXIMATE WATERLINE
- EDGE OF GRAVEL
- ROAD OR TRAIL
- FENCE LINE
- APPROXIMATE PROPERTY LINE
- APPROXIMATE RIGHT-OF-WAY LINE
- EDGE OF WETLAND
- 000 SPOT ELEVATION
- HORIZONTAL & VERTICAL CONTROL
- BENCHMARK

PROPOSED

- (1415) PROPOSED MAJOR CONTOUR
- (1411) PROPOSED MINOR CONTOUR
- PROPOSED AGRIDRAIN STRUCTURE
- PROPOSED PIPE
- PROPOSED WATER CONTROL STRUCTURE
- PROPOSED HEADWALL / ENDWALL
- PROPOSED MANHOLE
- 0.00 PROPOSED SPOT ELEVATION
- PROPOSED RIPRAP
- PROPOSED SPOIL/BORROW AREA

GREAT LAKES/ATLANTIC REGIONAL OFFICE
7322 NEWMAN BOULEVARD, BUILDING 1
DEXTER, MICHIGAN 48130
(734) 623-2000
www.ducks.org
DUCKS UNLIMITED

AFFIX SEAL: DUCKS UNLIMITED, INC.

ON:

SPECIFICATIONS AND NOTES
TWELVE MILE LAKE
ENHANCEMENTS
TWELVE MILE LAKE
EMMET COUNTY, IOWA

Revision	Sheet	Revisions	Date	By

CAD FILE: IA-355-1 COVER & NOTES
DESIGNED BY: JGW
DRAWN BY: JGW
SURVEYED BY: AB JGW
BIOLOGIST: DB
DATE: 08/14/2026
PROJECT NUMBER: US-IA-355-1

C002

NOTICE: CONSTRUCTION SITE SAFETY IS THE SOLE RESPONSIBILITY OF THE CONTRACTOR. DUCKS UNLIMITED, INC. SHALL NOT ASSUME ANY RESPONSIBILITY FOR THE SAFETY OF THE WORK PERFORMED. PERSONS ENGAGED IN THE WORK, NEARBY STRUCTURES, OR OF OTHER PERSONS ON-SITE. INFORMATION CONTAINED ON THESE PLANS AND SPECIFICATIONS IS THE PROPERTY OF DUCKS UNLIMITED, INC. AND IS NOT TO BE USED OR REPRODUCED FOR ANY PURPOSE WITHOUT THE PRIOR WRITTEN CONSENT OF AN AUTHORIZED AGENT OF DUCKS UNLIMITED, INC. THE INFORMATION ON THESE PLANS IS TYPICAL, UNLIMITED, INC. MAKES NO REPRESENTATION, EXPRESS OR IMPLIED, AS TO THE ACCURACY OF THE INFORMATION OR THE RESULTS THEREOF. AT THE USERS SOLE RISK. BY USING ANY OF THIS MATERIAL, DATA AND INFORMATION, USER AGREES THAT DUCKS UNLIMITED, INC. IS NOT RESPONSIBLE FOR THEIR USE OF THE MATERIAL, DATA AND INFORMATION OR THE RESULTS THEREOF. IT IS UNLAWFUL FOR ANY PERSON, UNLESS ACTING UNDER THE DIRECTION OF A LICENSED PROFESSIONAL ENGINEER, LANDSCAPE ARCHITECT OR LAND SURVEYOR, TO ALTER THESE PLANS IN ANY WAY. IF THESE PLANS ARE ALTERED, THE ALTERING ENGINEER, ARCHITECT, LANDSCAPE ARCHITECT OR LAND SURVEYOR SHALL STAMP THE DOCUMENT AND INCLUDE THE NOTATION "ALTERED BY" FOLLOWED BY THEIR SIGNATURE, THE DATE OF SUCH ALTERATION, AND A SPECIFIC DESCRIPTION OF THE ALTERATION.

C:\Users\jwashington\Ducks Unlimited Incorporated\Iowa - Iowa\02_C3D Projects\IA-355-1 Twelve Mile Lake\C3D_DRAWING\IA-355-1 COVER & NOTES.dwg, 8/14/2026 2:18 PM, John Washington, C002, None

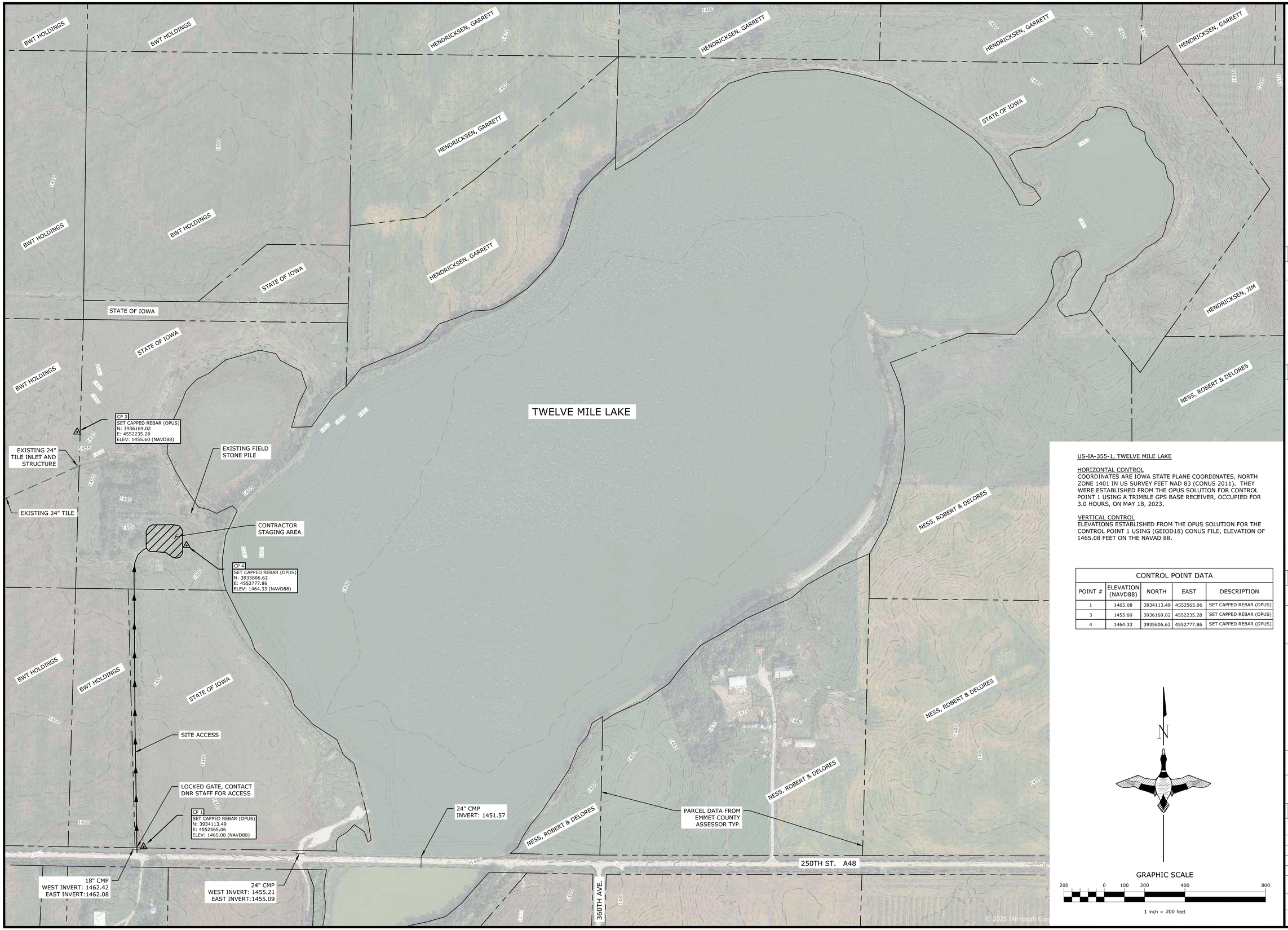

US-IA-355-1, TWELVE MILE LAKE

HORIZONTAL CONTROL
COORDINATES ARE IOWA STATE PLANE COORDINATES, NORTH ZONE 1401 IN US SURVEY FEET NAD 83 (CONUS 2011). THEY WERE ESTABLISHED FROM THE OPUS SOLUTION FOR CONTROL POINT 1 USING A TRIMBLE GPS BASE RECEIVER, OCCUPIED FOR 3.0 HOURS, ON MAY 18, 2023.

VERTICAL CONTROL
ELEVATIONS ESTABLISHED FROM THE OPUS SOLUTION FOR THE CONTROL POINT 1 USING (GEIOD18) CONUS FILE, ELEVATION OF 1465.08 FEET ON THE NAVAD 88.

CONTROL POINT DATA				
POINT #	ELEVATION (NAVD88)	NORTH	EAST	DESCRIPTION
1	1465.08	3934113.49	4552565.06	SET CAPPED REBAR (OPUS)
3	1455.60	3936169.02	4552235.28	SET CAPPED REBAR (OPUS)
4	1464.33	3935606.62	4552777.86	SET CAPPED REBAR (OPUS)

GRAPHIC SCALE
200 0 100 200 400 800
1 inch = 200 feet

NOTICE: CONSTRUCTION SITE SAFETY IS THE SOLE RESPONSIBILITY OF THE CONTRACTOR; DUCKS UNLIMITED, INC. SHALL NOT ASSUME ANY RESPONSIBILITY FOR THE SAFETY OF THE WORK PERFORMED, PERSONS ENGAGED IN THE WORK, NEARBY STRUCTURES, OR OF OTHER PERSONS ON-SITE. THE PROPERTY OF DUCKS UNLIMITED, INC. THIS MATERIAL (UNLESS OTHERWISE NOTED) IS THE PROPRIETARY PROPERTY OF DUCKS UNLIMITED, INC. AND MAY NOT BE USED OR REPRODUCED, IN WHOLE OR IN PART, FOR ANY PURPOSE WITHOUT THE PRIOR WRITTEN CONSENT OF AN AUTHORIZED AGENT OF DUCKS UNLIMITED, INC. ALL RIGHTS RESERVED. © DUCKS UNLIMITED, INC. 2026. DISCLAIMER: DUCKS UNLIMITED, INC. MAKES NO REPRESENTATIONS OR WARRANTIES AS TO THE ACCURACY, COMPLETENESS, OR SUITABILITY OF THIS MATERIAL, DATA AND INFORMATION FOR ANY PURPOSE. ANY RELIANCE ON THIS MATERIAL, DATA AND INFORMATION IS AT THE USERS SOLE RISK. BY USING ANY OF THIS MATERIAL, DATA AND INFORMATION, USER AGREES THAT DUCKS UNLIMITED, INC. IS NOT RESPONSIBLE FOR THEIR USE OF THE MATERIAL, DATA AND INFORMATION OR THE RESULTS THEREOF. IF ALTERED, THE ALTERING ENGINEER, ARCHITECT, LANDSCAPE ARCHITECT OR LAND SURVEYOR SHALL STAMP THE DOCUMENT AND INCLUDE THE NOTATION "ALTERED BY" FOLLOWED BY THEIR SIGNATURE, THE DATE OF SUCH ALTERATION, AND A SPECIFIC DESCRIPTION OF THE ALTERATION.

C:\Users\gsmith\OneDrive - Ducks Unlimited Incorporated\Iowa\02_C3D Projects\IA-355-1 Twelve Mile Lake\C3D_04\WING\IA-355-1 TOPO.dwg, 7/9/2026 1:18 PM, Gareth Smith, C050, None

GREAT LAKES/ATLANTIC REGIONAL OFFICE
7322 NEWMAN BOULEVARD, BUILDING 1
DEXTER, MICHIGAN 48130
(734) 623-2000
www.ducks.org
DUCKS UNLIMITED

AFFIX SEAL: DUCKS UNLIMITED, INC.

ON:

EXISTING CONDITIONS OVERVIEW
TWELVE MILE LAKE ENHANCEMENTS
TWELVE MILE LAKE
EMMET COUNTY, IOWA

	By	Date	Revisions	Sheet	Revision
	'	'	'	'	'

CAD FILE: IA-355-1 TOPO
DESIGNED BY: JGW
DRAWN BY: JGW
SURVEYED BY: AB JGW
BIOLOGIST: DB
DATE: 07/08/2026
PROJECT NUMBER: US-IA-355-1

C050



GREAT LAKES/ATLANTIC REGIONAL OFFICE
7322 NEWMAN BOULEVARD, BUILDING 1
DEXTER, MICHIGAN 48130
(734) 623-2000
www.ducks.org

DUCKS UNLIMITED

AFFIX SEAL: DUCKS UNLIMITED, INC.
ON:

EXISTING CONDITIONS AND REMOVALS
TWELVE MILE LAKE ENHANCEMENTS
TWELVE MILE LAKE
EMMET COUNTY, IOWA

Revision	Sheet	Revisions	Date	By
-	-	-	-	-
-	-	-	-	-
-	-	-	-	-
-	-	-	-	-
-	-	-	-	-
-	-	-	-	-

CAD FILE:
IA-355-1 TOPO
DESIGNED BY: JGW
DRAWN BY: JGW
SURVEYED BY: AB JGW
BIOLOGIST: DB
DATE:
07/08/2026
PROJECT NUMBER:
US-IA-355-1
C051

NOTICE: CONSTRUCTION SITE SAFETY IS THE SOLE RESPONSIBILITY OF THE CONTRACTOR. DUCKS UNLIMITED, INC. SHALL NOT ASSUME ANY RESPONSIBILITY FOR THE SAFETY OF THE WORK PERFORMED, PERSONS ENGAGED IN THE WORK, NEARBY STRUCTURES, OR OF OTHER PERSONS ON-SITE. THIS MATERIAL, DATA AND INFORMATION IS THE PROPERTY OF DUCKS UNLIMITED, INC. IT MAY NOT BE USED OR REPRODUCED FOR ANY PURPOSE WITHOUT THE PRIOR WRITTEN CONSENT OF AN AUTHORIZED AGENT OF DUCKS UNLIMITED, INC. DUCKS UNLIMITED, INC. MAKES NO REPRESENTATION OR WARRANTY OF ANY KIND REGARDING THIS MATERIAL, DATA AND INFORMATION, INCLUDING, BUT NOT LIMITED TO, THE ACCURACY OF THE MATERIAL, DATA AND INFORMATION OR ITS SUITABILITY FOR ANY PURPOSE. ALL USE OF THE MATERIAL, DATA AND INFORMATION IS AT THE USERS SOLE RISK. BY USING ANY OF THIS MATERIAL, DATA AND INFORMATION, USER AGREES THAT DUCKS UNLIMITED, INC. IS NOT RESPONSIBLE FOR THEIR USE OF THE MATERIAL, DATA AND INFORMATION OR THE RESULTS THEREOF. IT IS A VIOLATION OF LAW FOR ANY PERSON, UNLESS THEY ARE ACTING UNDER THE DIRECTION OF A LICENSED PROFESSIONAL ENGINEER, ARCHITECT, LANDSCAPE ARCHITECT OR LAND SURVEYOR, TO ALTER AN ITEM IN ANY WAY. IF AN ITEM BEARING THE STAMP OF A LICENSED PROFESSIONAL IS ALTERED, THE ALTERING ENGINEER, ARCHITECT, LANDSCAPE ARCHITECT OR LAND SURVEYOR SHALL STAMP THE DOCUMENT AND INCLUDE THE NOTATION "ALTERED BY" FOLLOWED BY THEIR SIGNATURE, THE DATE OF SUCH ALTERATION, AND A SPECIFIC DESCRIPTION OF THE ALTERATION.

C:\Users\gsmith\OneDrive - Ducks Unlimited Incorporated\Iowa\02_C3D Projects\IA-355-1 Twelve Mile Lake\C3D_DRAWING\IA-355-1 TOPO.dwg, 7/9/2026 1:19 PM, Gareth Smith, C051, None

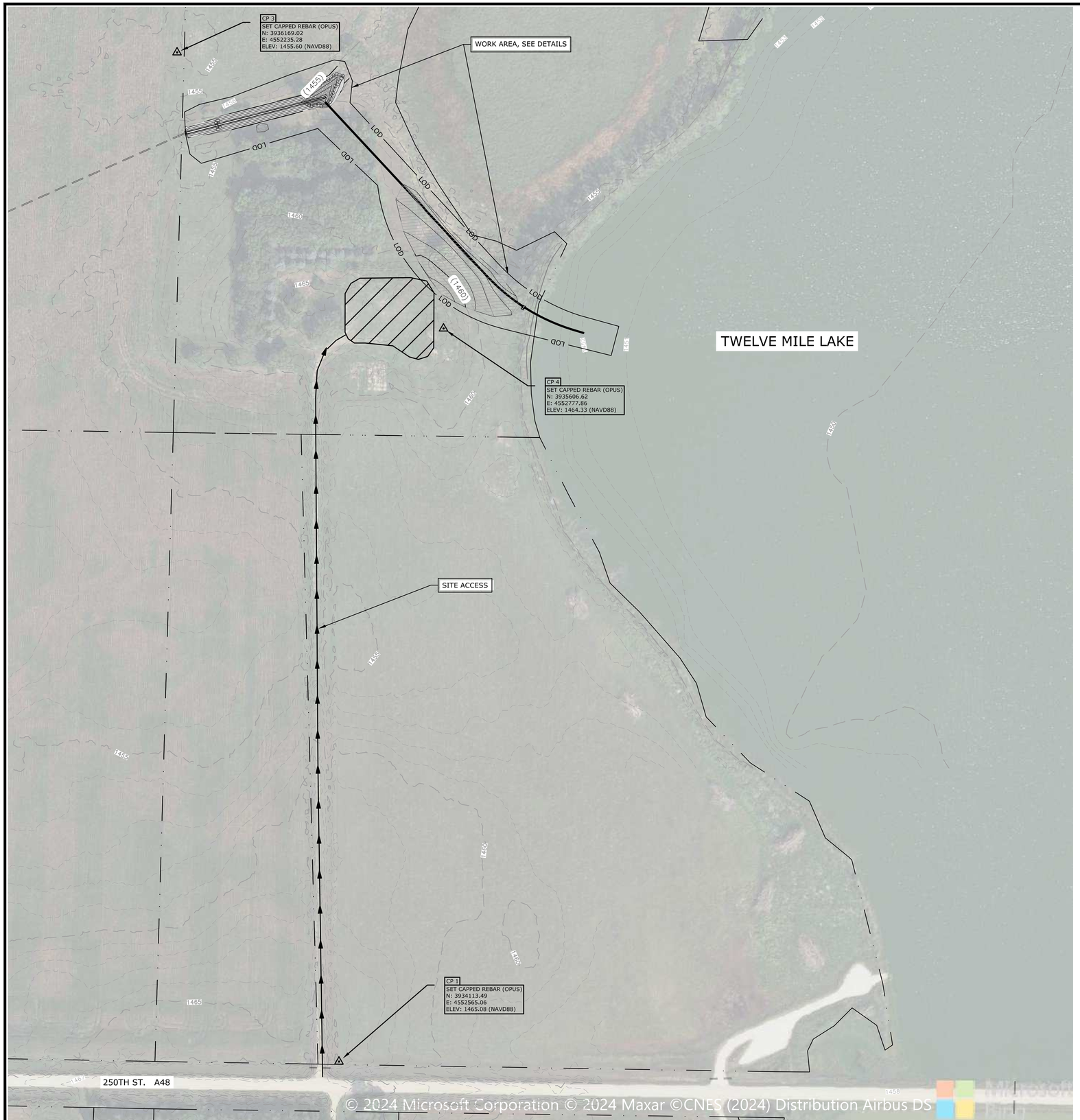

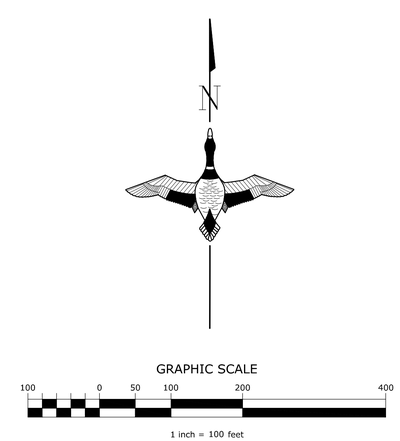

GREAT LAKES/ATLANTIC REGIONAL OFFICE
7322 NEWMAN BOULEVARD, BUILDING 1
DEXTER, MICHIGAN 48130
(734) 623-2000
www.ducks.org
DUCKS UNLIMITED

AFFIX SEAL: DUCKS UNLIMITED, INC.

ON:

SITE PLAN OVERVIEW
TWELVE MILE LAKE ENHANCEMENTS
TWELVE MILE LAKE
EMMET COUNTY, IOWA

Revision	Sheet	Revisions	Date	By

CAD FILE: IA-355-1 SITE

DESIGNED BY: JGW

DRAWN BY: JGW

SURVEYED BY: AB JGW

BIOLOGIST: DB

DATE: 07/08/2026

PROJECT NUMBER: US-IA-355-1

C100

NOTICE: CONSTRUCTION SITE SAFETY IS THE SOLE RESPONSIBILITY OF THE CONTRACTOR. DUCKS UNLIMITED, INC. SHALL NOT ASSUME ANY RESPONSIBILITY FOR THE SAFETY OF THE WORK PERFORMED, PERSONS ENGAGED IN THE WORK, NEARBY STRUCTURES, OR OF OTHER PERSONS ON-SITE. THIS MATERIAL, DATA AND INFORMATION IS THE PROPERTY OF DUCKS UNLIMITED, INC. IT MAY NOT BE USED OR REPRODUCED FOR ANY PURPOSE WITHOUT THE PRIOR WRITTEN CONSENT OF AN AUTHORIZED AGENT OF DUCKS UNLIMITED, INC. DUCKS UNLIMITED, INC. MAKES NO REPRESENTATION OR WARRANTY OF ANY KIND REGARDING THIS MATERIAL, DATA AND INFORMATION, INCLUDING, BUT NOT LIMITED TO, THE ACCURACY OF THE MATERIAL, DATA AND INFORMATION OR ITS SUITABILITY FOR ANY PURPOSE. ALL USE OF THE MATERIAL, DATA AND INFORMATION IS AT THE USERS SOLE RISK. BY USING ANY OF THIS MATERIAL, DATA AND INFORMATION, USER AGREES THAT DUCKS UNLIMITED, INC. IS NOT RESPONSIBLE FOR THEIR USE OF THE MATERIAL, DATA AND INFORMATION OR THE RESULTS THEREOF. IT IS A VIOLATION OF LAW FOR ANY PERSON, UNLESS THEY ARE ACTING UNDER THE DIRECTION OF A LICENSED PROFESSIONAL ENGINEER, ARCHITECT, LANDSCAPE ARCHITECT OR LAND SURVEYOR, TO ALTER AN ITEM IN ANY WAY. IF AN ITEM BEARING THE STAMP OF A LICENSED PROFESSIONAL IS ALTERED, THE ALTERING ENGINEER, ARCHITECT, LANDSCAPE ARCHITECT OR LAND SURVEYOR SHALL STAMP THE DOCUMENT AND INCLUDE THE NOTATION "ALTERED BY" FOLLOWED BY THEIR SIGNATURE, THE DATE OF SUCH ALTERATION, AND A SPECIFIC DESCRIPTION OF THE ALTERATION.

C:\Users\gsmith\OneDrive - Ducks Unlimited Incorporated\Iowa\02_C3D Projects\IA-355-1 Twelve Mile Lake\C3D_DRAWING\IA-355-1 SITE.dwg, 7/9/2026 10:40 AM, Gareth Smith, C100, None

NOTICE: CONSTRUCTION SITE SAFETY IS THE SOLE RESPONSIBILITY OF THE CONTRACTOR; DUCKS UNLIMITED, INC. SHALL NOT ASSUME ANY RESPONSIBILITY FOR THE SAFETY OF THE WORK PERFORMED). PERSONS ENGAGED IN THE WORK, NEARBY STRUCTURES, OR OF OTHER PERSONS ON-SITE. REPRESENTATIONS, DATA AND INFORMATION IS THE PROPERTY OF DUCKS UNLIMITED, INC. AND MAY NOT BE USED OR REPRODUCED FOR ANY PURPOSE WITHOUT THE PRIOR WRITTEN CONSENT OF DUCKS UNLIMITED. DUCKS UNLIMITED, INC. MAKES NO REPRESENTATIONS OR WARRANTIES AS TO THE ACCURACY, COMPLETENESS, SUITABILITY OR VALIDITY OF ANY INFORMATION AND WILL NOT BE LIABLE FOR ANY ERRORS, OMISSIONS OR DELAYS IN THE INFORMATION OR ANY LOSS, DAMAGE OR INJURY ARISING FROM OR OCCASIONED BY ANY USE OF OR RELIANCE ON THE INFORMATION. AT THE USERS SOLE RISK. BY USING ANY OF THIS MATERIAL, DATA AND INFORMATION, USER AGREES THAT DUCKS UNLIMITED, INC. IS NOT RESPONSIBLE FOR THEIR USE OF THE MATERIAL, DATA AND INFORMATION OR THE RESULTS THEREOF. IT IS A VIOLATION OF LAW FOR ANY PERSON, UNLESS ACTING UNDER THE DIRECTION OF A LICENSED PROFESSIONAL ENGINEER, ARCHITECT, LANDSCAPE ARCHITECT OR LAND SURVEYOR TO ALTER THIS DOCUMENT. IF THIS DOCUMENT HAS BEEN ALTERED, THE ALTERING ENGINEER, ARCHITECT, LANDSCAPE ARCHITECT OR LAND SURVEYOR SHALL STAMP THE DOCUMENT AND INCLUDE THE NOTATION "ALTERED BY" FOLLOWED BY THEIR SIGNATURE, THE DATE OF SUCH ALTERATION, AND A SPECIFIC DESCRIPTION OF THE ALTERATION.

C:\Users\gsmith\OneDrive - Ducks Unlimited Incorporated\Iowa\02_C3D Projects\IA-355-1 Twelve Mile Lake\C3D_DRAWING\IA-355-1 SITE.dwg, 7/9/2026 1:20 PM, Gareth Smith, C101, None

TWELVE MILE LAKE

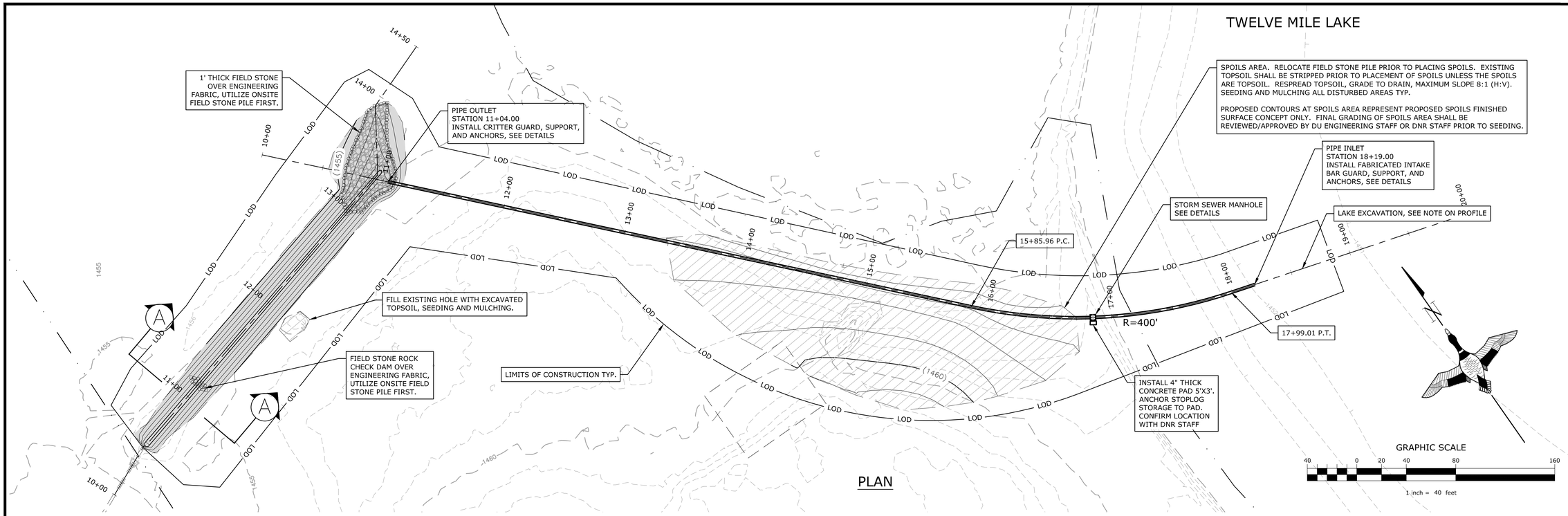

PLAN

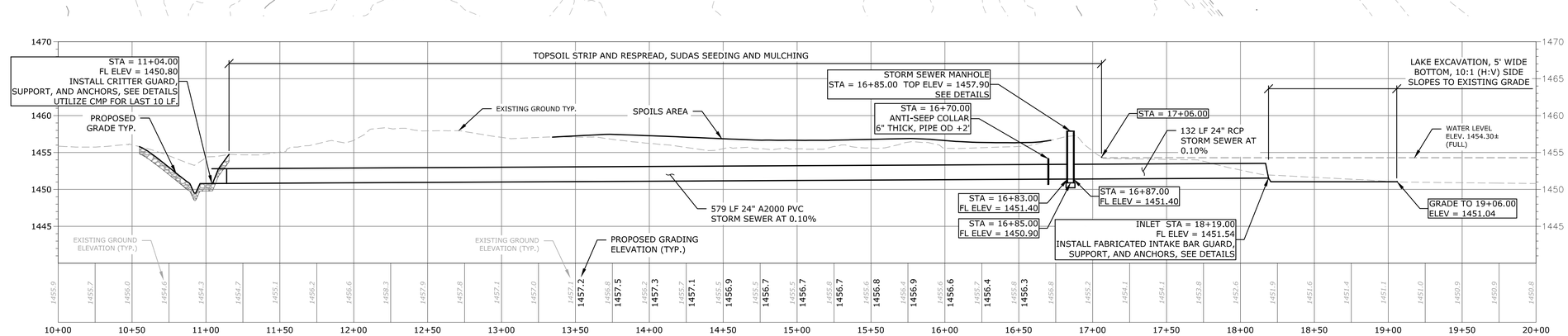

STORM SEWER PROFILE

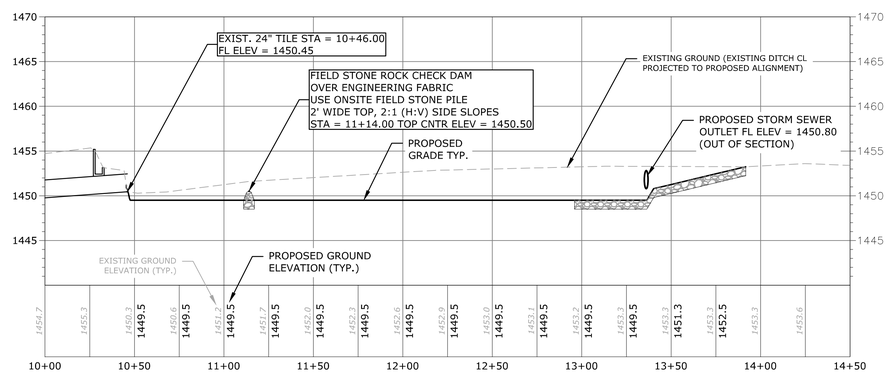

DITCH PROFILE

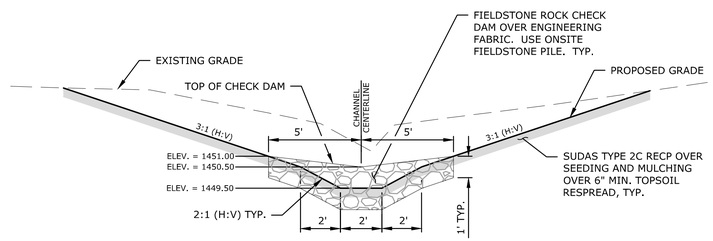

SECTION (A)
NOT TO SCALE

GREAT LAKES/ATLANTIC REGIONAL OFFICE
7322 NEWMAN BOULEVARD, BUILDING 1
DEXTER, MICHIGAN 48130
(734) 623-2000
www.ducks.org
DUCKS UNLIMITED

AFFIX SEAL: DUCKS UNLIMITED, INC.
ON:

SITE PLAN AND PROFILE
TWELVE MILE LAKE
ENHANCEMENTS
TWELVE MILE LAKE
EMMET COUNTY, IOWA

By	Date	Revisions	Sheet	Revision
-	-	-	-	-
-	-	-	-	-
-	-	-	-	-
-	-	-	-	-
-	-	-	-	-
-	-	-	-	-

CAD FILE: IA-355-1 SITE
DESIGNED BY: JGW
DRAWN BY: JGW
SURVEYED BY: AB JGW
BIOLOGIST: DB
DATE: 07/08/2026
PROJECT NUMBER: US-IA-355-1

C101

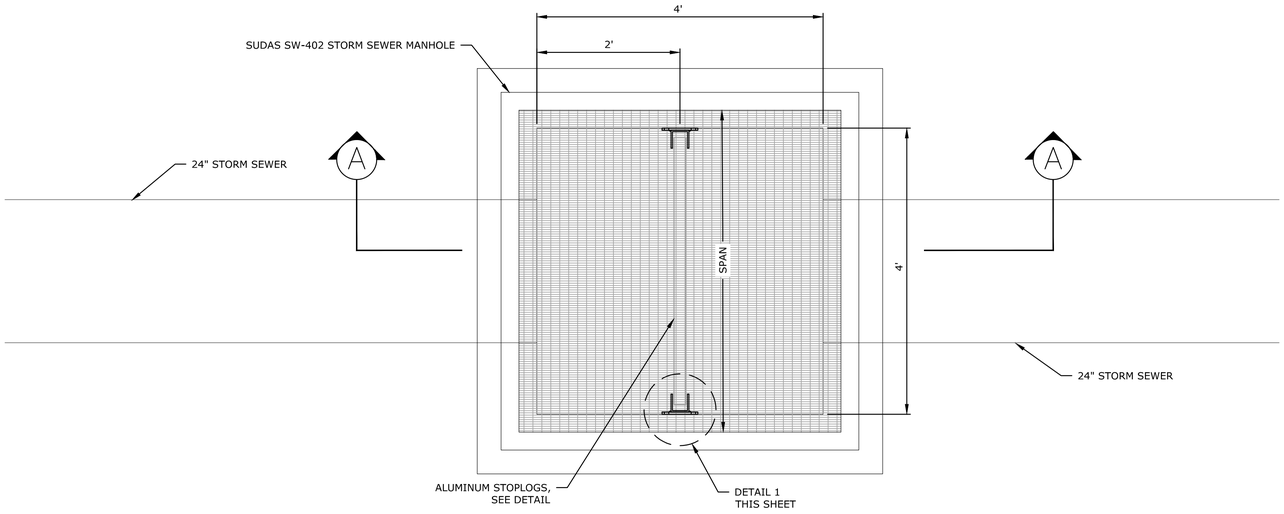

PLAN VIEW - STORM SEWER MANHOLE

SCALE: 1"=1'

GENERAL NOTES

1. CONTRACTOR SHALL FIELD VERIFY ALL DIMENSIONS PRIOR TO FABRICATION.
2. ALL MATERIALS INCLUDING HARDWARE SHALL BE HOT DIPPED GALVANIZED UNLESS OTHERWISE NOTED.
3. ALL ANCHORS SHALL BE DRILLED AND EPOXIED WITH HILTI HIT-HY 200 OR APPROVED EQUAL, 4-INCH MINIMUM EMBEDMENT. UNLESS SCREW ANCHOR IS NOTED. DRILLED HOLES SHALL BE SIZED, BRUSHED, BLOWN OUT, AND CLEANED PER ANCHOR MANUFACTURERS INSTRUCTIONS.
4. ALL BOLTED CONNECTIONS AND ANCHORS SHALL INCLUDE FLAT WASHERS, LOCK WASHERS, AND NUTS AS APPROPRIATE.
5. ALL STEEL TO STEEL CONTACT POINTS SHALL BE FULLY WELDED UNLESS A BOLTED CONNECTION OR STITCH WELD IS NOTED.
6. ALL FABRICATING AND WELDING SHALL BE COMPLETED PRIOR TO HOT DIP GALVANIZING.
7. SHIMMING, ADJUSTING, LEVELING, GROUTING, AND OTHERWISE COMPLETING THE INSTALLATION OF FABRICATED ITEMS IN A WORKMAN-LIKE MANNER SHALL BE INCIDENTAL TO INSTALLATION.

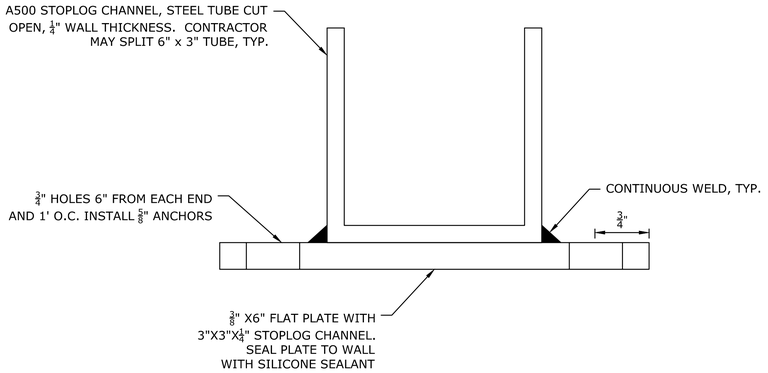

DETAIL 1

SCALE: 1"=1"

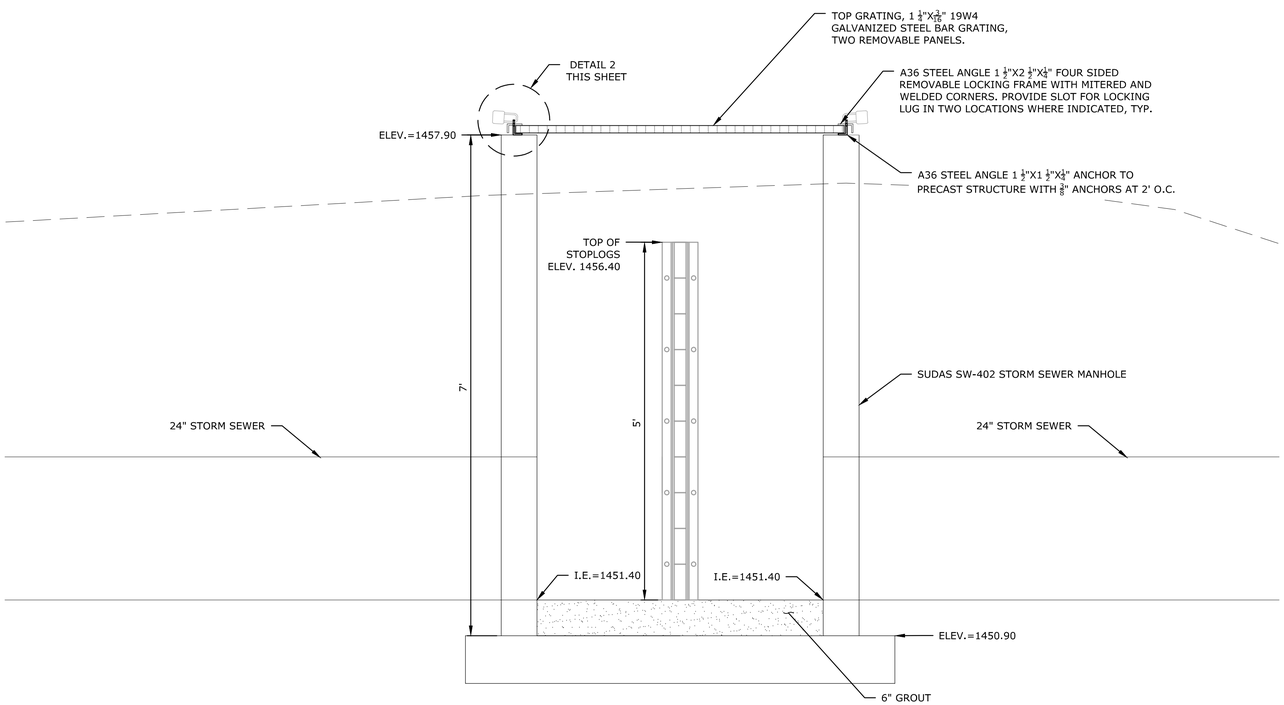

SECTION A

SCALE: 1"=1'

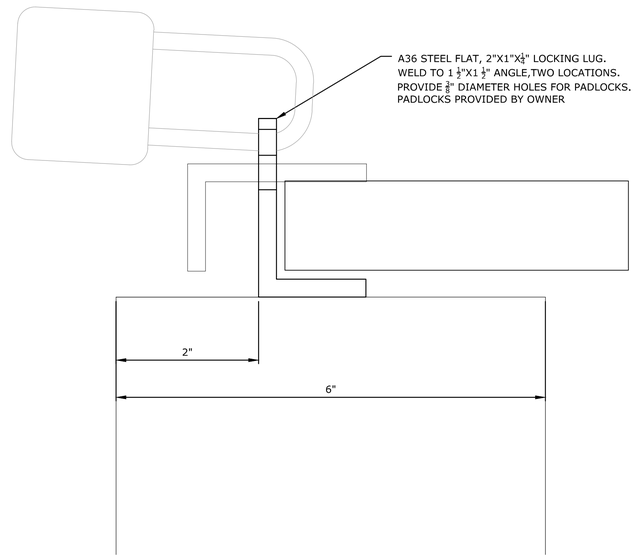

DETAIL 2

SCALE: 1"=1"

GREAT LAKES/ATLANTIC REGIONAL OFFICE
7322 NEWMAN BOULEVARD, BUILDING 1
DEXTER, MICHIGAN 48130
(734) 623-2000
www.ducks.org
DUCKS UNLIMITED

AFFIX SEAL: DUCKS UNLIMITED, INC.

ON:

DETAILS
TWELVE MILE LAKE ENHANCEMENTS
TWELVE MILE LAKE
EMMET COUNTY, IOWA

By	Date	Revisions	Sheet	Revision
,	,	,	,	,

CAD FILE: IA-355-1 DETAILS

DESIGNED BY: JGW

DRAWN BY: JGW

SURVEYED BY: AB JGW

BIOLOGIST: DB

DATE: 07/08/2026

PROJECT NUMBER: US-IA-355-1

C301

NOTICE: CONSTRUCTION SITE SAFETY IS THE SOLE RESPONSIBILITY OF THE CONTRACTOR; DUCKS UNLIMITED, INC. SHALL NOT ASSUME ANY RESPONSIBILITY FOR THE SAFETY OF THE WORK PERFORMED, PERSONS ENGAGED IN THE WORK, NEARBY STRUCTURES, OR OF OTHER PERSONS ON-SITE. REPRESENTATIONS, DATA AND INFORMATION IS THE PROPERTY OF DUCKS UNLIMITED, INC. AND MAY NOT BE USED OR REPRODUCED, FOR ANY PURPOSE, WITHOUT THE PRIOR WRITTEN CONSENT OF DUCKS UNLIMITED, INC. ANY USE OF SUCH REPRESENTATIONS, DATA AND INFORMATION BY ANY PERSON OR ENTITY OTHER THAN DUCKS UNLIMITED, INC. OR ITS AUTHORIZED AGENT OF DUCKS UNLIMITED, INC. FOR THE PURPOSE INTENDED BY DUCKS UNLIMITED, INC. IS AT THE USER'S SOLE RISK. BY USING ANY OF THIS MATERIAL, DATA AND INFORMATION, USER AGREES THAT DUCKS UNLIMITED, INC. IS NOT RESPONSIBLE FOR THEIR USE OF THE MATERIAL, DATA AND INFORMATION OR THE RESULTS THEREOF. IT IS UNLAWFUL FOR ANY PERSON, UNLESS ACTING UNDER THE DIRECTION OF A LICENSED ARCHITECT, LANDSCAPE ARCHITECT OR LAND SURVEYOR, TO ALTER THIS ARTIFACT IN ANY WAY. IF THIS ARTIFACT IS ALTERED, THE ALTERING ENGINEER, ARCHITECT, LANDSCAPE ARCHITECT OR LAND SURVEYOR SHALL STAMP THE DOCUMENT AND INCLUDE THE NOTATION "ALTERED BY" FOLLOWED BY THEIR SIGNATURE, THE DATE OF SUCH ALTERATION, AND A SPECIFIC DESCRIPTION OF THE ALTERATION.

C:\Users\gsmith\OneDrive - Ducks Unlimited Incorporated\Iowa\02_C3D Projects\IA-355-1 Twelve Mile Lake\C3D_DRAWING\IA-355-1 DETAILS.dwg, 7/9/2026 10:43 AM, Gareth Smith, Details C301, None

GENERAL NOTES

1. CONTRACTOR SHALL FIELD VERIFY ALL DIMENSIONS PRIOR TO FABRICATION.
2. ALL MATERIALS INCLUDING HARDWARE SHALL BE HOT DIPPED GALVANIZED UNLESS OTHERWISE NOTED.
3. ALL ANCHORS SHALL BE DRILLED AND EPOXIED WITH HILTI HIT-HY 200 OR APPROVED EQUAL, 4-INCH MINIMUM EMBEDMENT. UNLESS SCREW ANCHOR IS NOTED. DRILLED HOLES SHALL BE SIZED, BRUSHED, BLOWN OUT, AND CLEANED PER ANCHOR MANUFACTURERS INSTRUCTIONS.
4. ALL BOLTED CONNECTIONS AND ANCHORS SHALL INCLUDE FLAT WASHERS, LOCK WASHERS, AND NUTS AS APPROPRIATE.
5. ALL STEEL TO STEEL CONTACT POINTS SHALL BE FULLY WELDED UNLESS A BOLTED CONNECTION OR STITCH WELD IS NOTED.
6. ALL FABRICATING AND WELDING SHALL BE COMPLETED PRIOR TO HOT DIP GALVANIZING.
7. SHIMMING, ADJUSTING, LEVELING, GROUTING, AND OTHERWISE COMPLETING THE INSTALLATION OF FABRICATED ITEMS IN A WORKMAN-LIKE MANNER SHALL BE INCIDENTAL TO INSTALLATION.

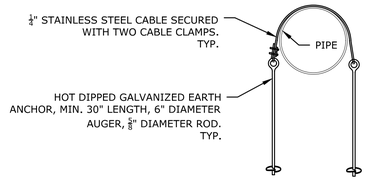

ANCHOR DETAIL

NOT TO SCALE

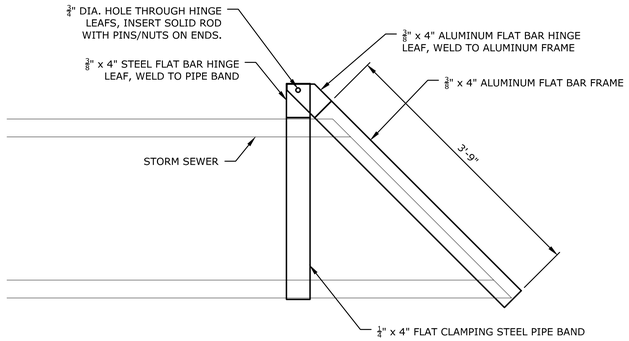

PROFILE

SCALE: 1"=1'

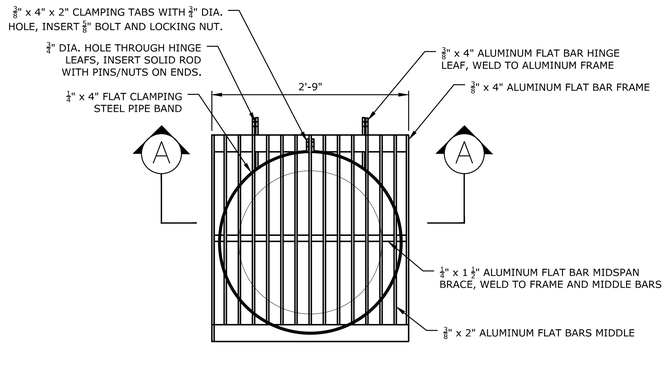

ELEVATION

SCALE: 1"=1'

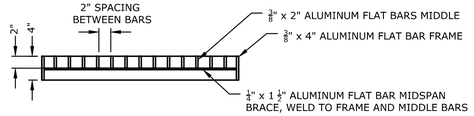

SECTION

SCALE: 1"=1'

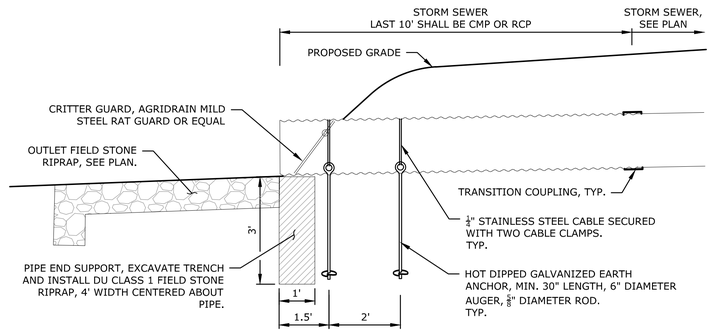

STORM SEWER OUTLET DETAIL

NOT TO SCALE

FABRICATED INTAKE BAR GUARD DETAIL

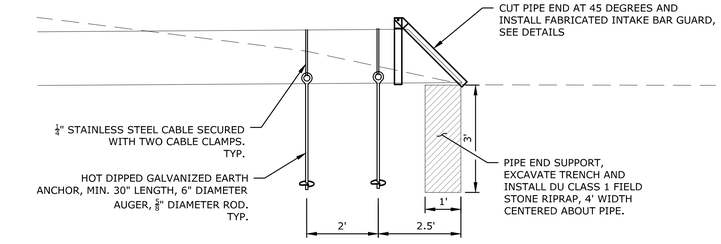

STORM SEWER INLET DETAIL

NOT TO SCALE

STOPLOG NOTES

1. CONTRACTOR SHALL SUPPLY FABRICATED STOPLOGS OF QUANTITIES AND SIZES LISTED BELOW.
2. STOPLOGS SHALL BE FABRICATED FROM 6061 T6 ¼" WALL ALUMINUM RECTANGULAR TUBE.
3. STOPLOG LENGTH AND SLOT SIZE/LOCATION CENTERED ON TOP EDGE IS CRITICAL TO AVOID LEAKAGE. FINISHED SURFACES SHALL BE SMOOTH AND FLAT.
4. STOPLOGS ARE INCIDENTAL TO THE STORM SEWER MANHOLE.

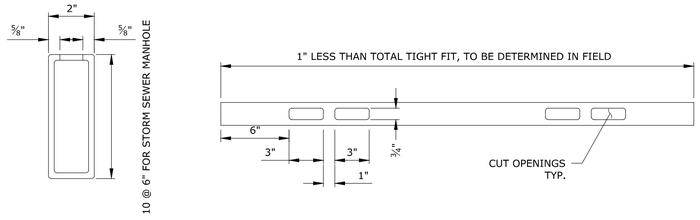

ALUMINUM STOPLOG DETAIL

NOT TO SCALE

NOTICE: CONSTRUCTION SITE SAFETY IS THE SOLE RESPONSIBILITY OF THE CONTRACTOR; DUCKS UNLIMITED, INC. SHALL NOT ASSUME ANY RESPONSIBILITY FOR THE SAFETY OF THE WORK PERFORMED, PERSONS ENGAGED IN THE WORK, NEARBY STRUCTURES, OR OF OTHER PERSONS ON-SITE. THIS MATERIAL, DATA AND INFORMATION IS THE PROPERTY OF DUCKS UNLIMITED, INC. AND MAY NOT BE USED OR REPRODUCED FOR ANY PURPOSE WITHOUT THE PRIOR WRITTEN CONSENT OF AN AUTHORIZED AGENT OF DUCKS UNLIMITED, INC. DUCKS UNLIMITED, INC. MAKES NO REPRESENTATIONS OR WARRANTIES AS TO THE ACCURACY OR COMPLETENESS OF THIS MATERIAL, DATA AND INFORMATION AND SHALL HAVE NO LIABILITY FOR ANY INCORRECT OR INCOMPLETE INFORMATION OR THE RESULTS THEREOF. AT THE USERS SOLE RISK. BY USING ANY OF THIS MATERIAL, DATA AND INFORMATION, USER AGREES THAT DUCKS UNLIMITED, INC. IS NOT RESPONSIBLE FOR THEIR USE OF THE MATERIAL, DATA AND INFORMATION OR THE RESULTS THEREOF. IT IS VOID AND UNLAWFUL FOR ANY PERSON OR ENTITY TO ALTER THIS DOCUMENT IN ANY WAY AND USE IT WITHOUT FULLY REMOVING ALL REFERENCES TO DUCKS UNLIMITED, INC. IF THIS DOCUMENT IS ALTERED, THE ALTERING ENGINEER, ARCHITECT, LANDSCAPE ARCHITECT OR LAND SURVEYOR SHALL STAMP THE DOCUMENT AND INCLUDE THE NOTATION "ALTERED BY" FOLLOWED BY THEIR SIGNATURE, THE DATE OF SUCH ALTERATION, AND A SPECIFIC DESCRIPTION OF THE ALTERATION.

C:\Users\gsmith\OneDrive - Ducks Unlimited Incorporated\Iowa\02_C3D Projects\IA-355-1 Twelve Mile Lake\C3D_DRAWINGS\IA-355-1 DETAILS.dwg, 7/9/2026 10:44 AM, Gareth Smith, Details C302, None

GREAT LAKES/ATLANTIC REGIONAL OFFICE
7322 NEWMAN BOULEVARD, BUILDING 1
DEXTER, MICHIGAN 48130
(734) 623-2000
www.ducks.org
DUCKS UNLIMITED

AFFIX SEAL: DUCKS UNLIMITED, INC.

ON:

DETAILS
TWELVE MILE LAKE
ENHANCEMENTS
TWELVE MILE LAKE
EMMET COUNTY, IOWA

By	Date	Revisions	Sheet	Revision
,	,	,	,	,
,	,	,	,	,
,	,	,	,	,
,	,	,	,	,
,	,	,	,	,
,	,	,	,	,

CAD FILE: IA-355-1 DETAILS
DESIGNED BY: JGW
DRAWN BY: JGW
SURVEYED BY: AB JGW
BIOLOGIST: DB
DATE: 07/08/2026
PROJECT NUMBER: US-IA-355-1

C302

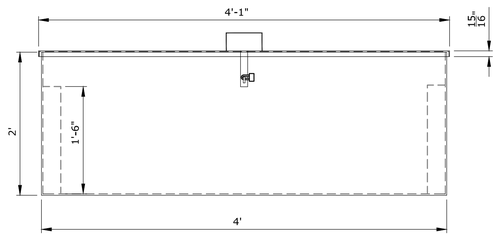

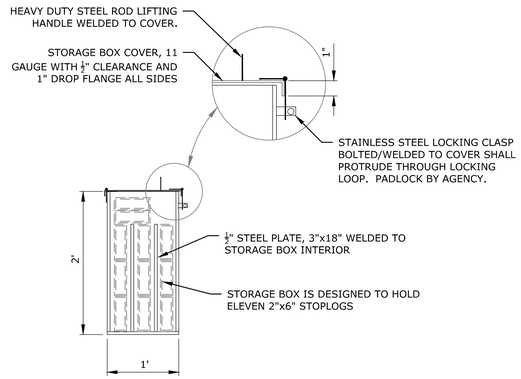

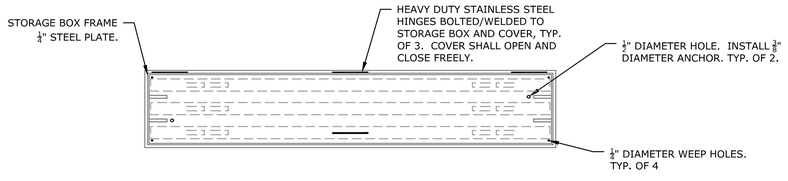

STOPLOG STORAGE BOX DETAIL

NOT TO SCALE QUANTITY: 1

GENERAL NOTES

1. CONTRACTOR SHALL FIELD VERIFY ALL DIMENSIONS PRIOR TO FABRICATION.
2. ALL MATERIALS INCLUDING HARDWARE SHALL BE HOT DIPPED GALVANIZED UNLESS OTHERWISE NOTED.
3. ALL ANCHORS SHALL BE DRILLED AND EPOXIED WITH HILTI HIT-HY 200 OR APPROVED EQUAL, 8-INCH MINIMUM EMBEDMENT. UNLESS SCREW ANCHOR IS NOTED. DRILLED HOLES SHALL BE SIZED, BRUSHED, BLOWN OUT, AND CLEANED PER ANCHOR MANUFACTURERS INSTRUCTIONS.
4. ALL BOLTED CONNECTIONS AND ANCHORS SHALL INCLUDE FLAT WASHERS, LOCK WASHERS, AND NUTS AS APPROPRIATE.
5. ALL STEEL TO STEEL CONTACT POINTS SHALL BE FULLY WELDED UNLESS A BOLTED CONNECTION OR STITCH WELD IS NOTED.
6. ALL FABRICATING AND WELDING SHALL BE COMPLETED PRIOR TO HOT DIP GALVANIZING.
7. SHIMMING, ADJUSTING, LEVELING, GROUTING, AND OTHERWISE COMPLETING THE INSTALLATION OF FABRICATED ITEMS IN A WORKMAN-LIKE MANNER SHALL BE INCIDENTAL TO INSTALLATION.

GREAT LAKES/ATLANTIC REGIONAL OFFICE
7322 NEWMAN BOULEVARD, BUILDING 1
DEXTER, MICHIGAN 48130
(734) 623-2000
www.ducks.org
DUCKS UNLIMITED

AFFIX SEAL: DUCKS UNLIMITED, INC.

ON:

DETAILS
TWELVE MILE LAKE
ENHANCEMENTS
TWELVE MILE LAKE
EMMET COUNTY, IOWA

Revision	Sheet	Revisions	Date	By
-	-	-	-	-

CAD FILE: IA-355-1 DETAILS
DESIGNED BY: JGW
DRAWN BY: JGW
SURVEYED BY: AB JGW
BIOLOGIST: DB
DATE: 07/08/2026
PROJECT NUMBER: US-IA-355-1

C303

NOTICE: CONSTRUCTION SITE SAFETY IS THE SOLE RESPONSIBILITY OF THE CONTRACTOR. DUCKS UNLIMITED, INC. SHALL NOT ASSUME ANY RESPONSIBILITY FOR THE SAFETY OF THE WORK PERFORMED, PERSONS ENGAGED IN THE WORK, NEARBY STRUCTURES, OR OF OTHER PERSONS ON-SITE. THIS MATERIAL, DATA AND INFORMATION IS THE PROPERTY OF DUCKS UNLIMITED, INC. AND MAY NOT BE USED OR REPRODUCED FOR ANY PURPOSE WITHOUT THE PRIOR WRITTEN CONSENT OF AN AUTHORIZED AGENT OF DUCKS UNLIMITED, INC. DUCKS UNLIMITED, INC. MAKES NO REPRESENTATION, DATA AND INFORMATION IS PROVIDED "AS IS" WITHOUT WARRANTY OF ANY KIND, EITHER EXPRESSED OR IMPLIED, INCLUDING BUT NOT LIMITED TO THE IMPLIED WARRANTIES OF MERCHANTABILITY AND FITNESS FOR A PARTICULAR PURPOSE. AT THE USERS SOLE RISK. BY USING ANY OF THIS MATERIAL, DATA AND INFORMATION, USER AGREES THAT DUCKS UNLIMITED, INC. IS NOT RESPONSIBLE FOR THEIR USE OF THE MATERIAL, DATA AND INFORMATION OR THE RESULTS THEREOF. IT IS A VIOLATION OF LAW FOR ANY PERSON, UNLESS THEY ARE ACTING UNDER THE DIRECTION OF A LICENSED ARCHITECT, ENGINEER, OR LANDSCAPE ARCHITECT, TO ALTER THIS ARCHITECTURAL OR ENGINEERING DOCUMENT IN ANY WAY. IF THIS DOCUMENT IS ALTERED, THE ALTERING ENGINEER, ARCHITECT, LANDSCAPE ARCHITECT OR LAND SURVEYOR SHALL STAMP THE DOCUMENT AND INCLUDE THE NOTATION "ALTERED BY" FOLLOWED BY THEIR SIGNATURE, THE DATE OF SUCH ALTERATION, AND A SPECIFIC DESCRIPTION OF THE ALTERATION.

C:\Users\gsmith\OneDrive - Ducks Unlimited Incorporated\Iowa\02_C3D Projects\IA-355-1 Twelve Mile Lake\C3D_DRAWING\IA-355-1 DETAILS.dwg, 7/9/2026 10:56 AM, Gareth Smith, C303 DETAILS, None

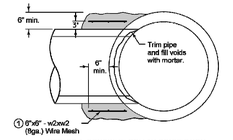

TYPE PC-1 CONCRETE COLLAR CONNECTION

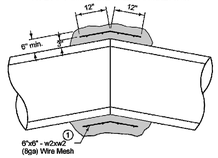

TYPE PC-2 CONCRETE COLLAR CONNECTION

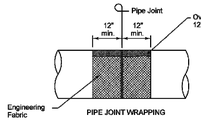

PIPE JOINT WRAPPING

PIPE TO PIPE CONNECTION

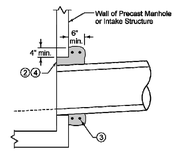

CONCRETE COLLAR FOR PIPES 12" AND SMALLER

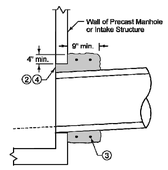

CONCRETE COLLAR FOR PIPES GREATER THAN 12"

PIPE TO STRUCTURE CONNECTION

① Lap ends of wire mesh a minimum of 6 inches.

② Concrete collar is required when annular space between the outside of the pipe and the wall of the structure is 2 inches or greater.

③ Provide two #4 hoop bars in concrete collar. Lap bars a minimum of 6 inches.

④ Trowel concrete flush with inside wall of structure.

SUDAS	HOWADOT	REVISION
		04-17-13
FIGURE 4020.211	STANDARD ROAD PLAN	SW-211
		SHEET 1 of 1

REVISIONS: Standard "sweep" callout on Wing & Sidewalls Thru "Installed and Anchored as Shown" and 4020.203 and 4020.204 Figure Side Slope Values.

Thad B. Wright — Bryan J. Smith
Name, SUDAS Engineer — Name, IAHTO Chairman

STORM SEWER PIPE CONNECTIONS

FIGURE 4020.211 | SHEET 1 OF 1

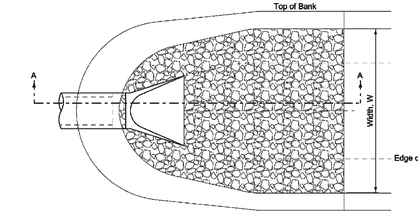

PLAN

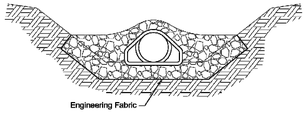

CROSS-SECTION

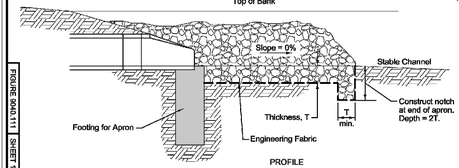

PROFILE
Section A-A

SUDAS	REVISION
	1-5-21-14
	SHEET 1 of 1

SUDAS Standard Specifications

RIP RAP APRON FOR PIPE OUTLET INTO CHANNEL

FIGURE 9040.111 | SHEET 1 OF 1

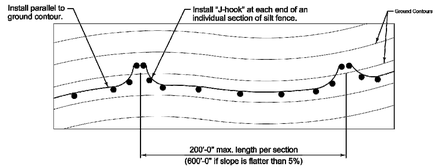

TYPICAL SILT FENCE INSTALLATION ON LONGITUDINAL SLOPES
(Plan View)

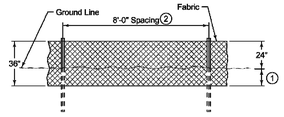

DETAILS OF SILT FENCE ON LONGITUDINAL SLOPES

① Insert 12 inches of fabric a minimum of 6 inches deep (fabric may be folded below the ground line).

② Reduce post spacing to 5'-0" at water concentration areas, or as required to adequately support fence.

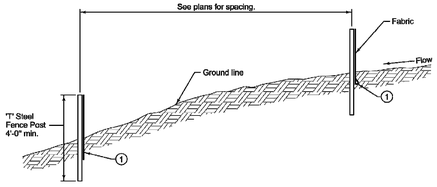

TYPICAL SILT FENCE INSTALLATION ON LONGITUDINAL SLOPES
(Profile View)

SUDAS	REVISION
	1-5-21-14
9040.119	SHEET 2 of 2

SUDAS Standard Specifications

SILT FENCE

FIGURE 9040.119 | SHEET 2 OF 2

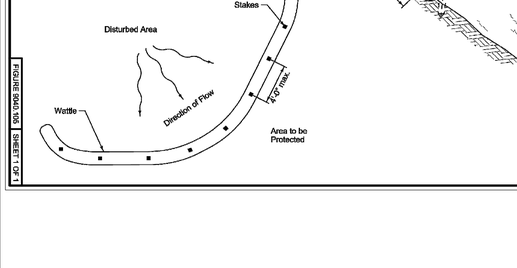

STAPLE CHECK

ANCHOR SLOT
(1'-0" max. anchor spacing)

END LAP

SUDAS	REVISION
	2 10-21-14
9040.104	SHEET 1 of 1

SUDAS Standard Specifications

ROLLED EROSION CONTROL PRODUCT (RECP) INSTALLATION IN CHANNEL

FIGURE 9040.104 | SHEET 1 OF 1

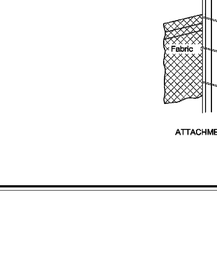

CONCRETE COLLAR



SECTION A-A

Anti-seep collars are not required unless specified in the contract documents.

SECTION B-B

CMP COLLAR

SUDAS	REVISION
	2 10-21-14
9040.117	SHEET 1 of 1

SUDAS Standard Specifcations

ANTI-SEEP COLLAR

FIGURE 9040.117 | SHEET 1 OF 1

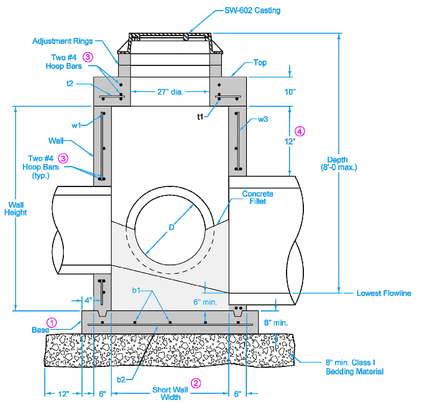

TYPICAL SECTION

Adjacent walls may have different widths based upon pipe configuration, but structure must be rectangular.

① Cast-in-place base shown. If base is precast integral with walls, the footprint of the base is not required to extend beyond the outer edge of the walls.

② Wall widths vary with pipe diameter and range from 40 inches minimum to 77 inches maximum. Provide 6 inches of wall width (minimum) each side of pipe opening.

③ Provide two #4 hoop bars at top opening and at all pipe openings.

④ 12 inch minimum wall height above all pipes.

SUDAS	HOWADOT	REVISION
		2 04-21-20
FIGURE 4001.402	STANDARD ROAD PLAN	SW-402
		SHEET 1 of 2

REVISIONS: Added Class I Backfill Material

Thad B. Wright — Bryan J. Smith
Name, SUDAS Engineer — Name, IAHTO Chairman

RECTANGULAR STORM SEWER MANHOLE

FIGURE 4001.402 | SHEET 1 OF 2

SUDAS	REVISION
	2 10-21-14
9040.105	SHEET 1 of 1

SUDAS Standard Specifications

WATTLE

FIGURE 9040.105 | SHEET 1 OF 1

TYPICAL SILT FENCE DITCH CHECK

ATTACHMENT TO POST

① Insert 12 inches of fabric a minimum of 6 inches deep (fabric may be folded below the ground line).

SUDAS	REVISION
	1-5-21-14
9040.119	SHEET 1 of 2

SUDAS Standard Specifications

SILT FENCE

FIGURE 9040.119 | SHEET 1 OF 2

PLAN

② Wall widths vary with pipe diameter and range from 40" minimum to 77" maximum. Provide 6" of wall width (minimum) each side of pipe opening.

③ Provide two #4 hoop bars at top opening and at all pipe openings.

REINFORCING BAR LIST					
Mark	Size	Location	Shape	Length	Spacing
t1	See Table	Top	——	Long Wall plus 8"	6"
t2	See Table	Top	——	Short Wall plus 8"	6"
b1	See Table	Base	——	Long Wall plus 14"	12"
b2	See Table	Base	——	Short Wall plus 14"	12"
w1	See Table	Walls	——	Long Wall plus 8"	12"
w2	See Table	Walls	——	Short Wall plus 8"	12"
w3	See Table	Walls	——	Wall Height minus 4"	12"

Diameter of Largest Pipe, D	Minimum Bar Size
48" or 42"	6
33" to 42"	5
30" or smaller	4

SUDAS	HOWADOT	REVISION
		2 10-21-20
FIGURE 4001.402	STANDARD ROAD PLAN	SW-402
		SHEET 2 of 2

REVISIONS: Added Class I Backfill Material

Thad B. Wright — Bryan J. Smith
Name, SUDAS Engineer — Name, IAHTO Chairman

RECTANGULAR STORM SEWER MANHOLE

FIGURE 4001.402 | SHEET 2 OF 2

NOTICE: CONSTRUCTION SITE SAFETY IS THE SOLE RESPONSIBILITY OF THE CONTRACTOR; DUCKS UNLIMITED, INC. SHALL NOT ASSUME ANY RESPONSIBILITY FOR THE SAFETY OF THE WORK PERFORMED, PERSONS ENGAGED IN THE WORK, NEARBY STRUCTURES, OR OF OTHER PERSONS ON-SITE. THE CONTENTS OF THIS PLAN SET, INCLUDING BUT NOT LIMITED TO THE TECHNICAL DRAWINGS, SPECIFICATIONS, AND ALL OTHER DOCUMENTS PREPARED BY DUCKS UNLIMITED, INC. ("DUCKS UNLIMITED") CONSTITUTE THE PROPRIETARY WORK PRODUCT OF DUCKS UNLIMITED. THE MATERIAL, DATA AND INFORMATION CONTAINED IN THESE PLANS ARE COMMUNICATED WITH THE EXPRESS UNDERSTANDING THAT NEITHER THE RECEIVING PARTY NOR ANY THIRD PARTY SHALL REPRODUCE, TRANSMIT, OR USE THE SAME FOR ANY PURPOSE WITHOUT THE PRIOR WRITTEN CONSENT OF DUCKS UNLIMITED. NO REPRESENTATION, DATA AND INFORMATION IS TRANSFERRED TO THE RECEIVING PARTY OR ANY THIRD PARTY BY DUCKS UNLIMITED, INC. BY USING ANY OF THIS MATERIAL, DATA AND INFORMATION, USER AGREES THAT DUCKS UNLIMITED, INC. IS NOT RESPONSIBLE FOR THEIR USE OF THE MATERIAL, DATA AND INFORMATION OR THE RESULTS THEREOF. AT THE USER'S SOLE RISK. BY USING ANY OF THIS MATERIAL, DATA AND INFORMATION, USER AGREES TO INDEMNIFY AND HOLD HARMLESS DUCKS UNLIMITED, INC. FOR ANY AND ALL LIABILITIES, CLAIMS, DAMAGES, LOSSES, AND EXPENSES ARISING OUT OF OR RESULTING FROM USER'S USE OF THE MATERIAL, DATA AND INFORMATION. IF THESE PLANS ARE ALTERED, THE ALTERING ENGINEER, ARCHITECT, LANDSCAPE ARCHITECT OR LAND SURVEYOR SHALL STAMP THE DOCUMENT AND INCLUDE THE NOTATION "ALTERED BY" FOLLOWED BY THEIR SIGNATURE, THE DATE OF SUCH ALTERATION, AND A SPECIFIC DESCRIPTION OF THE ALTERATION.

C:\Users\gsmith\OneDrive - Ducks Unlimited Incorporated\Iowa\02_C3D Projects\IA-355-1 Twelve Mile Lake\C3D_DRAWINGS\IA-355-1 DETAILS.dwg, 7/9/2026 10:46 AM, Gareth Smith, C304 DETAILS, None

GREAT LAKES/ATLANTIC REGIONAL OFFICE
7322 NEWMAN BOULEVARD, BUILDING 1
DEXTER, MICHIGAN 48130
(734) 623-2000
www.ducks.org
DUCKS UNLIMITED

AFFIX SEAL: DUCKS UNLIMITED, INC.

ON:

DETAILS
TWELVE MILE LAKE
ENHANCEMENTS
TWELVE MILE LAKE
EMMET COUNTY, IOWA

By	Date	Revisions	Sheet	Revision
, , , , , ,	, , , , , ,	, , , , , ,	, , , , , ,	, , , , , ,

CAD FILE:
IA-355-1 DETAILS

DESIGNED BY: JGW

DRAWN BY: JGW

SURVEYED BY: AB JGW

BIOLOGIST: DB

DATE:
07/08/2026

PROJECT NUMBER:
US-IA-355-1

C304